A STUDY OF METHODS USED IN

MEASUREMENT AND ANALYSIS OF SEDIMENT LOADS IN STREAMS

PROGRESS REPORT

COMPARATIVE FIELD TESTS ON SUSPENDED SEDIMENT SAMPLERS

DECEMBER 1944

Subject: Progress Report, Comparative Field Tests on Suspended Sediment Samplers

To: The Interdepartmental Committee on "Study of Methods Used in Measurement and Analysis of Sediment Loads in Streams," Washington, D. C.

1. The Committee in session in Washington, D. C., 3 July 1942, took action to inaugurate field tests on the experimental models of the depth- and point-integrating sediment samplers, US D-43 and P-43, developed under the cooperative project, to determine their practicability and accuracy in relation to other samplers in current use. The results of the tests reported by field offices of the cooperating agencies prior to 28 March 1944 were presented to the Committee assembled on that date in Washington, D. C., in reports entitled, "Progress Report on the Development of the Point-Integrating Sediment Sampler and Field Tests by Cooperating Agencies," by Martin E. Nelson, and "Preliminary Field Tests of the US Sediment-Sampling Equipment in the Colorado River Basin," by P. C. Benedict.

2. In accordance with the instructions given by the Committee 28 March 1944, the undersigned have reviewed the reports on comparative tests on suspended sediment samplers that have been submitted subsequently by field offices of the cooperating agencies. The data obtained in the comparative tests, the sampling methods used, and the prevailing stream conditions have been analyzed and, in the light of this information, tentative sampling coefficients of various extant sediment samplers in respect to the US D-43 and P-43 samplers have been determined. The analyses and discussions of the field reports are presented in the accompanying joint report entitled, "Progress Report, Comparative Field Tests on Suspended Sediment Samplers, December 1944." The comments, criticisms, and suggestions for improvements in design submitted respecting the D-43 and P-43 samplers are also discussed. Conclusions drawn from this study and recommendations as to further developments that might be undertaken by the Committee are summarized in the joint progress report.

3. As directed in the minutes of the March 1944 meeting, reports of the field agencies are attached to the joint report in thirteen appendices essentially in the form in which they were submitted. Should the Committee decide to distribute the joint report to field offices and personnel of the cooperating agencies, it is suggested that the appendices be omitted, because it is believed that adequate data have been included and that the discussions are sufficiently clear to support the joint report without the excessive bulk entailed by the field reports. Furthermore, copies of the field reports can be made available to anyone who is interested in making an independent study of the data and comments included in them.

Paul C Benedict

Paul C. Benedict
U. S. Geological Survey

Martin E Nelson

Martin E. Nelson
U. S. Engineer Office

Iowa City, Iowa
29 December 1944

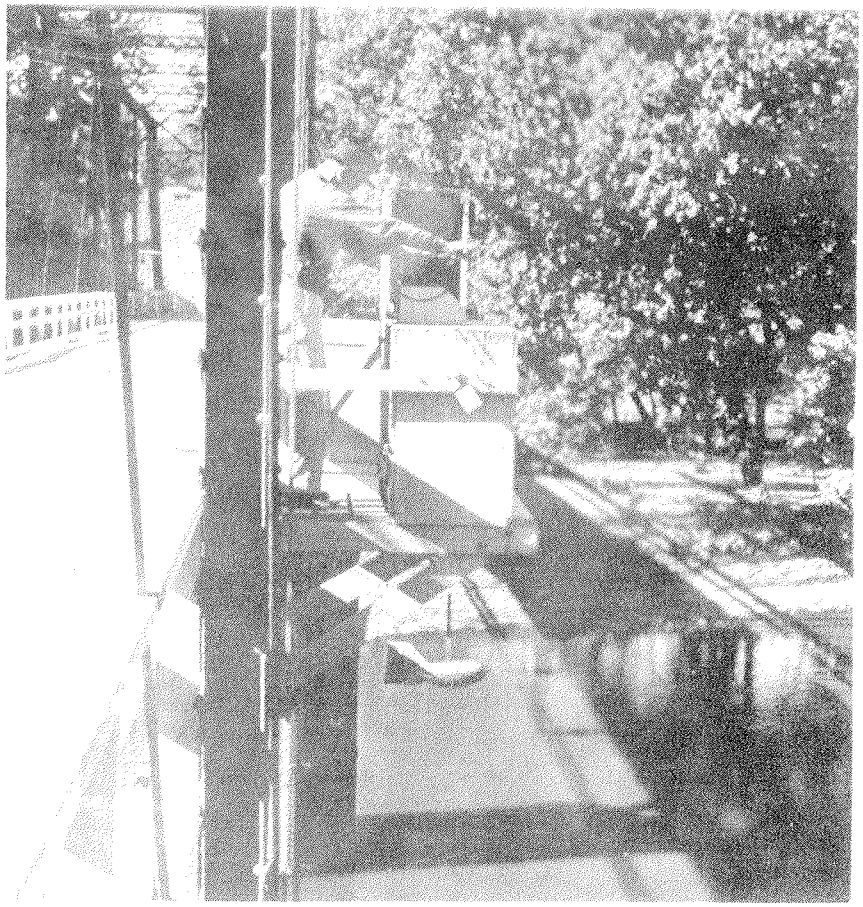

U. S. Geological Survey sediment sampling station,
Iowa River above Coralville, Iowa.

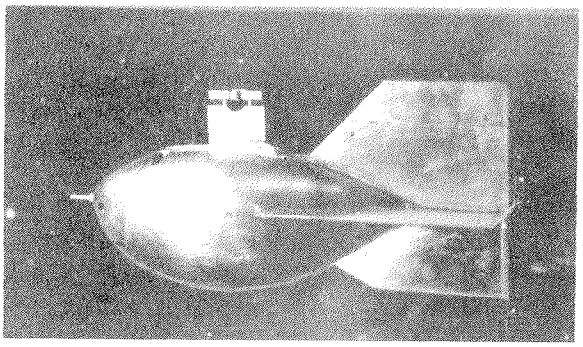

US P-43 sediment sampler.

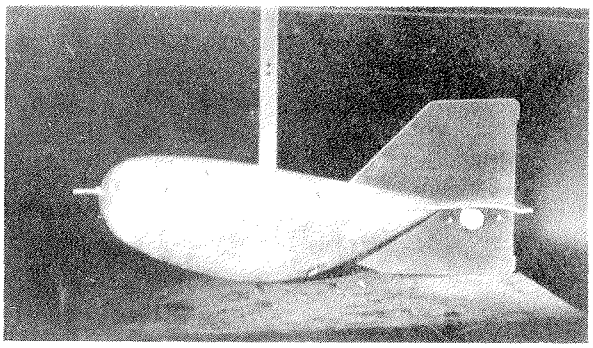

US D-43 sediment sampler.

A Study of Methods Used in

MEASUREMENT AND ANALYSIS OF SEDIMENT LOADS IN STREAMS

Planned and conducted jointly by

Tennessee Valley Authority, Corps of Engineers,

Department of Agriculture, Geological Survey,

Bureau of Reclamation, Indian Service, and

Iowa Institute of Hydraulic Research

Progress Report

COMPARATIVE FIELD TESTS ON SUSPENDED SEDIMENT SAMPLERS

Published at

St. Paul U. S. Engineer District Sub-Office
Hydraulic Laboratory, University of Iowa
Iowa City, Iowa

December 1944

SYNOPSIS

The study of "Methods Used in Measurement and Analysis of Sediment Loads in Streams," inaugurated in 1939 under the sponsorship of the Tennessee Valley Authority, Corps of Engineers, Department of Agriculture, Geological Survey, Bureau of Reclamation, and Office of Indian Affairs, in cooperation with the Iowa Institute of Hydraulic Research, has led to the development of improved equipment for sampling suspended fluvial sediment. Experimental models of depth-integrating and point-integrating sediment samplers, designated US D-43 and P-43 sediment samplers, respectively, were completed in 1943. Both of the experimental models and several duplicates of the D-43 sampler have subsequently been subjected to tests under practical field conditions alongside of and in comparison with other sediment samplers in current use to determine the practicability of the new samplers and to determine their sampling accuracy with respect to others. The comparative test data submitted in reports by thirteen field offices have been analyzed in this report. The results of the tests, conclusions, and recommendations respecting further development of sampling equipment as indicated by the field reports are discussed.

In general, present models of the US D-43 and P-43 samplers proved to be satisfactory for average stream conditions. Some modifications are indicated to satisfy extremes of depth and velocity. The efficiency of many of the present samplers compares favorably with the improved instruments when stream velocities and sediment concentrations are low and uniformly distributed with respect to depth and where the sediment particles are finely divided. However, under contrasting sampling conditions, results obtained with other types of samplers show considerable disparity with respect to those obtained with the D-43 and P-43 samplers. In some instances, this disparity results in part from the fact that the methods of sampling used were not conducive to accurate determination of the sediment concentration in a stream vertical. The study reveals the necessity for standardization of sampling equipment and for improvement of sampling methods now in current use, and indicates that with some modifications in design the US samplers together with the methods adopted for their use will be found acceptable and practicable for all conditions encountered in fluvial sediment sampling.

TABLE OF CONTENTS

Section		Page
Synopsis		2
	I. INTRODUCTION	
1	Authority and purpose	7
	II. DISCUSSIONS	
	U. S. GEOLOGICAL SURVEY	
2	Washington, D. C.	9
3	Iowa City, Iowa	10
	U. S. BUREAU OF RECLAMATION	
4	Denver, Colorado	10
	OFFICE OF INDIAN AFFAIRS	
5	Chicago, Illinois	20
	TENNESSEE VALLEY AUTHORITY	
6	Knoxville, Tennessee	21
	U. S. ENGINEER OFFICE	
7	Huntington; West Virginia	22
8	Tulsa, Oklahoma	25
9	Albuquerque, New Mexico	28
10	Sacramento, California	37
11	Cincinnati, Ohio	39
12	Rock Island, Illinois	40
13	Omaha, Nebraska	42
14	Buffalo, New York	49

TABLE OF CONTENTS (Contd.)

Section | Page

III. SUMMARY

15 Summary of test results..... 51

16 Recommendations..... 56

IV. APPENDICES

A Field tests of the US D-43 sediment sampler in the Colorado River Basin, May 1944, by S. K. Love and C. S. Howard, U. S. Geological Survey, Washington, D. C. (US D-43 and Colorado River samplers)

B Field use of the US D-43 sediment sampler in Iowa streams by P. C. Benedict, U. S. Geological Survey, Iowa City, Iowa

C Field tests on sediment samplers by the U. S. Bureau of Reclamation, Denver, Colorado (US D-43, US P-43, and Tait-Binckley samplers)

D Field tests on sediment samplers by the Office of Indian Affairs, Chicago, Illinois

E Field tests on sediment samplers by Tennessee Valley Authority, Knoxville, Tennessee (US P-43 sediment sampler)

F Field tests on sediment samplers by the U. S. Engineer Office, Huntington, West Virginia (US P-43 and Ohio River Division samplers)

G Field tests on sediment samplers by the U. S. Engineer Office, Tulsa, Oklahoma (US D-43, US P-43, Texas, and Vicksburg samplers)

H Field tests on sediment samplers by the U. S. Engineer Office, Albuquerque, New Mexico (US D-43, Faris, Colorado River, and Albuquerque wading samplers)

I Field tests on sediment samplers by the U. S. Engineer Office, Sacramento, California (US D-43 and Sacramento samplers)

J Field tests on sediment samplers by the U. S. Engineer Office, Cincinnati, Ohio (US D-43 and Ohio River Division samplers)

K Field tests on sediment samplers by the U. S. Engineer Office, Rock Island, Illinois (US D-43 and Rock Island samplers)

L Field tests on sediment samplers by the U. S. Engineer Office, Omaha, Nebraska (US D-43, US P-43, Omaha, Omaha Instantaneous and Omaha Modified samplers)

M Field tests on sediment samplers by the U. S. Engineer Office, Buffalo, New York (US D-43 sampler)

LIST OF ILLUSTRATIONS

Figure — Page

U. S. Geological Survey sediment-sampling station, Iowa River above Coralville, Iowa.....Frontispiece

US P-43 sediment sampler.....Frontispiece

US D-43 sediment sampler.....Frontispiece

1 Variation of sediment concentration with time as shown by the D-43 and Tait-Binckley samplers, Colorado River near Yuma, Arizona, August 17, 1943..... 14

2 Results of size analyses of sediment in samples collected at a point one foot below the water surface with the D-43 and Tait-Binckley samplers on August 17, 1943..... 15

3 Results of size analyses of sediment in samples at points one foot below the water surface, mid-depth, and one foot above the bottom taken with the Tait-Binckley sampler on August 19, 1943..... 16

4 Variation of sediment concentration with time as shown by P-43 and Tait-Binckley samplers, Colorado River near Yuma, Arizona, December 20, 1943..... 18

5 Results of comparative tests with the Faris and D-43 samplers..... 35

6 Drawing of US P-43 sediment sampler..... 52

7 Drawing of US D-43 sediment sampler..... 53

LIST OF TABLES

Table		Page
1	Intake characteristics of the D-43 sampler	11
2	Intake characteristics of the P-43 sampler	12
3	Comparison of concentrations in T-B and D-43 samples	13
4	Comparison of concentrations in T-B and P-43 samples	17
5	Summary of field tests on ORD and P-43 samplers	24
6	Field tests on sediment samplers by the U. S. Engineer Office, Tulsa, Oklahoma	26
7	Field tests on samplers by the U. S. Engineer Office, Albuquerque, New Mexico	32
8	Field tests on Faris and D-43 samplers in Rio Grande	33
9	Field tests on Sacramento and D-43 samplers	38
10	Summary of field tests on sediment samplers by the U. S. Engineer Office, Rock Island, Illinois	41
11	Summary of field tests on sediment samplers during 1943 by the U. S. Engineer Office, Omaha, Nebraska	44
12	Results of field tests on Omaha instantaneous sampler	44
13	Summary of field tests on sediment samplers during 1944 by the U. S. Engineer Office, Omaha, Nebraska	45
14	Comparison of sampling methods with Omaha and D-43 samplers	46
15	Comparison of Omaha and US P-43 samplers	47
16	Correlation equations for sampling data obtained with Omaha, D-43, and P-43 samplers	48
17	Comparison of Omaha and D-43 samples with particles larger than 0.02 mm. excluded	49
18	Summary of sampling ratios indicated by field tests on sediment samplers	54

COMPARATIVE FIELD TESTS ON SUSPENDED SEDIMENT SAMPLERS

I. INTRODUCTION

1. Authority and purpose--The Federal cooperative project for investigating sediment sampling equipment and technique, initiated in 1939 under the sponsorship of the Corps of Engineers, Geological Survey, Bureau of Reclamation, Office of Indian Affairs, Tennessee Valley Authority, and Department of Agriculture, in collaboration with the Iowa Institute of Hydraulic Research, has resulted in the development of two new types of suspended sediment samplers, one a point-integrating and the other a depth-integrating sampler. The point-integrating sampler, designated US P-43 sediment sampler, is designed to collect a representative sample of the suspended sediment load in transit past a chosen point in a stream during a short interval of time. The depth-integrating sampler, designated US D-43 sediment sampler, is designed to collect a representative sample of the suspended sediment load passing a vertical section in a stream during a short interval of time. The US P-43 and D-43 samplers are illustrated in the frontispiece of this report and in Figs. 6 and 7, respectively.

At the meeting held in Washington, D. C., on 3 July 1942, the Interdepartmental Committee responsible for this project considered that the laboratory development of the improved sediment samplers had reached such a stage that the experimental models should be tried under field conditions. It was thought that the basic requirements for accuracy were adequately provided in the experimental models but that practical improvements might be indicated when operated under conditions met in routine sediment sampling and by the personnel who are regularly engaged in that work. The final design of the samplers would thus have the benefit of suggestions by field personnel for such improvements as would facilitate their operation, and any features that might prove to be unsatisfactory in the experimental models could be corrected in the design of future models. It was desired also to obtain data from parallel field tests on the improved samplers and on other types of samplers in regular use under as nearly identical conditions and procedures as possible in order to compare the sampling qualities of the respective instruments.

Therefore, the Committee authorized the construction of duplicates of the experimental depth-integrating sampler for any of the agencies who wished to purchase and allocate them to their respective field offices. The depth-integrating samplers were made in two sizes, weighing 38 and 50 pounds, respectively, in order that field tests could be made over a wider range of flow conditions. It was anticipated that if the field tests proved the sampler to be a practical instrument for the collection of samples, heavier samplers could then be designed for streams with maximum depths and velocities within the range of the depth-integration method of sampling, and, likewise, the sampler could be redesigned for hand use in shallow or small streams, if a need for such equipment was indicated.

Ten samplers were requisitioned by the agencies, and when completed in May 1943, they were distributed to the field offices listed in the following tabulation. The auxiliary head for the D-43 sampler shown in Fig. 7 was provided only on the samplers constructed for the U. S. Geological Survey.

Agency	Address	Weight of Sampler, lbs.
U. S. Geological Survey	Iowa City, Iowa	38
U. S. Geological Survey	Albuquerque, New Mexico	50
Office of Indian Affairs	Coolidge, Arizona	50
U. S. Bureau of Reclamation	Yuma, Arizona	38
U. S. Engineer Office	Rock Island, Illinois	38
U. S. Engineer Office	Omaha, Nebraska	50
U. S. Engineer Office	Cincinnati, Ohio	50
U. S. Engineer Office	Tulsa, Oklahoma	38
U. S. Engineer Office	Albuquerque, New Mexico	50
U. S. Engineer Office	Sacramento, California	38

Two of the experimental depth-integrating samplers were given field tests by the U. S. Geological Survey in 1943. The results of these tests were submitted to the Committee at the meeting held in March 1944. Prior and subsequent to that meeting, similar tests were conducted by the Bureau of Reclamation and the U. S. Engineer Offices at Rock Island, Omaha, Cincinnati, Tulsa, Albuquerque, Sacramento, and Buffalo. The U. S. Geological Survey also made further field tests of the sampler in 1944.

The experimental model of the point-integrating sampler has been made available for loan to any of the cooperating agencies or their field offices upon request for examination and tests. Prior to the Committee meeting held in March 1944, this sampler had been tested by the U. S. Geological Survey, the Bureau of Reclamation, and the U. S. Engineer Office in Huntington, West Virginia. The results of these tests were discussed in reports submitted at the meeting. Subsequently, it has been tested by the Tennessee Valley Authority and the U. S. Engineer District Offices in Huntington, West Virginia; Tulsa, Oklahoma; and Omaha, Nebraska.

At the meeting of the Committee in March 1944, it was agreed that each agency should report the results of tests performed on the samplers in the field. The writers were delegated to compile the field reports and to distribute copies to the members of the Committee. Pursuantly, the reports by the respective field offices are appended hereto in substantially their original form, while the significant results and data are abstracted and discussed briefly in the following paragraphs.

II. DISCUSSIONS

2. Field tests of the US D-43 sediment sampler, U. S. Geological Survey--Comparative field tests on the US sediment sampling equipment and the Colorado River sampler made by the Geological Survey in the Colorado River Basin in May 1943 are described in a report* released in April 1944. In May 1944, additional tests were made in the Colorado River Basin to observe the operation of the D-43 sampler under high water conditions and to determine the effect of the taper of the intake nozzles on the intake velocities. Some comparative samples were also collected with the Colorado River sampler. As in 1943, the tests were made from cable cars which are permanent equipment for making routine measurements of flow and collecting daily sediment samples. The results of the 1944 tests are discussed in detail in Appendix A.

The results of the field tests made in 1944 on the US D-43 sampler verify those made in 1943 for similar flow conditions. The operation of the sampler was satisfactory at the Bluff station on the San Juan River and reasonably satisfactory at the Lees Ferry station on the Colorado River where the maximum depth and average velocity in the vertical section were 15.6 feet and 9.7 feet per second, respectively. At the Grand Canyon station on the Colorado River, the auxiliary head and bottom closing device were used. Since the stream depths were about 30 feet and the velocity in the vertical section averaged nearly 10 feet per second, a 75-lb. sounding weight was placed on the hanger bar one foot above the sampler. Even with the additional weight, vertical angles of 20 degrees were observed at depths in excess of 20 feet. The downstream drag, of course, varies with the distance the sounding reel is above the water surface for identical stream depths and velocities. Without additional weight, the sampler could not be safely lowered to depths in excess of about 17 feet. Except for the excessive downstream drift of the sampler, its performance under these difficult sampling conditions appeared reasonably satisfactory.

The intake characteristics of the D-43 sampler with the 3/16-in. diameter tapered nozzle verify those shown for the tests made in 1943. Some clogging was experienced with the 1/8-in. diameter nozzle at the Bluff station. Comparative tests made with tapered and untapered nozzles indicate the velocity in the nozzle at point of intake can be varied to a degree by increasing or decreasing the length of the tapered section.

Since the field operation of the 50-lb. D-43 sampler was found to be generally satisfactory for sampling conditions for which it was designed, the development of a 100-lb. sampler for swift and deep streams was recommended. In addition, it was further recommended that positive action catches be designed for all samplers of the D-43 type.

Size analyses by the bottom withdrawal tube were made of some 50 samples collected during the field studies. The results of analyses of comparative

---

* "Preliminary Field Tests of the US Sediment Sampling Equipment in the Colorado River Basin," by P. C. Benedict.

samples collected with the D-43 and Colorado River samplers verify the conclusions reached in the 1943 tests; i.e., the D-43 sampler because of its sampling action collects a more representative sample than the Colorado River sampler, particularly where coarser material is in suspension. Results of analyses of samples collected at the Grand Canyon station, three days after those obtained at the Lees Ferry station, show that the sediment in suspension was considerably coarser, over 50 per cent of the particles being larger than 0.1 mm. in diameter, and about 5 per cent larger than 0.5 mm. in diameter.

3. Field use of the US D-43 sediment sampler in Iowa streams, U. S. Geological Survey--The results of the preliminary field tests of the US sediment sampling equipment by the Geological Survey in 1943 indicated that the D-43 sampler was a practical instrument for the collection of sediment samples. Therefore, and as a part of the program to standardize sampling equipment among the agencies participating in the joint investigation at the laboratory, the D-43 sampler was selected for use in connection with the determination of daily sediment loads at three cooperative stations on the Iowa and Cedar Rivers in Iowa. These investigations also afforded an opportunity to obtain further information on the field operation of the sampler. A photograph of the installation on the Iowa River above Coralville is shown on page 3 of Appendix B, a report on the use of the D-43 sampler in Iowa streams, and on the frontispiece.

The routine field use of the D-43 sampler has demonstrated that it is, in general, satisfactory for collecting daily samples in Iowa Rivers. It was necessary, however, to repair the catches several times during the year. In an attempt to further improve the field operation of this feature and to reduce the cost of repairs, an alternate catch was designed and installed on two of the samplers (See Appendix B.). Although the new catch simplifies the field operation somewhat, its use has been too limited to indicate its practicability.

The use of the 50-lb. D-43 sampler during the 1944 May and June floods in Iowa indicated that it was satisfactory for Iowa streams with depths of about 20 feet with a maximum mean velocity in the vertical section of 6 feet per second. For streams having greater depths or velocities or both, the weight of the sampler should be increased to prevent undesirable downstream drift during the sampling operation.

4. Field tests by the U. S. Bureau of Reclamation--Comparative field tests were made with the US sediment sampling equipment and the Tait-Binckley sampler at the Yuma cable on the Colorado River near Yuma, Arizona, from a boat. The stream velocities varied from 2.5 to 4.0 feet per second; the stream depths from 3.8 to 15.0 feet. The ratios of intake velocity to stream velocity for the D-43 and P-43 samplers averaged 1.04 and 0.98, respectively. The current meter velocity observations were made at the Tait-Binckley sampling point, which was about 6 feet upstream from the sampling point for the US samplers. The base data presented for review are summarized in Tables 1 and 2.

TABLE 1

INTAKE CHARACTERISTICS OF THE D-43 SAMPLER

Date	Number Samples	Nozzle Dia., in.	R_L ft./sec.	Stream Depth, ft.	Average Velocity		
					Intake	Stream*	Ratio = $\frac{\text{Intake}}{\text{Stream}}$
8-17-43	20	1/8	**	11.5	3.76	3.82	0.98
	16	1/8	**	11.5	3.72	3.79	0.98
	18	3/16	**	11.5	3.85	3.44	1.12
	18	3/16	**	11.5	3.87	3.50	1.11
						Average =	1.05
8-19-43	36	1/8	0.67	11.6	3.14	3.17	1.00
9- 1-43	54	1/8	0.50	9.1	3.11	3.08	1.01
	53	1/8	0.50	9.9	3.17	3.21	0.99
	54	3/16	0.67	6.8	2.96	2.61	1.13
	54	3/16	0.33	3.8	2.63	2.41	1.09
						Average =	1.04

*Velocity determinations made about 6 feet upstream from sampling point.

**Point-integrated samples taken by lowering the sampler suddenly to a point one foot below the water surface. No correction made for initial inrush. R_L indicates the transit rate of the sampler in feet per second.

The samples obtained with the Tait-Binckley sampler, hereafter designated as the T-B sampler, were taken at a point about 6 feet upstream from where the D-43 and P-43 samples were taken. Each T-B sample was collected at the instant the D-43 sampler made contact with the stream bed. In order to compare the results obtained with D-43 and T-B samplers, it was necessary to compute the weighted concentration in the vertical section from concentrations shown by the latter sampler for the several points and corresponding velocities in each section sampled. Comparisons of mean concentrations obtained in this manner give an average of 0.77 for the sampling ratio, T-B/D-43. The average results of the tests are given in Table 3. The variation of sediment concentration with time in samples taken one foot below the water surface with both samplers is shown in Fig. 1. The results of a part of the size analyses performed by the bottom withdrawal tube method are shown in Figs. 2 and 3.

In making comparative field tests with the T-B and P-43 samplers, the T-B samples were taken at the middle of the sampling period for the P-43 sampler at a point about 6 feet upstream. The ratio of the concentrations,

TABLE 2

INTAKE CHARACTERISTICS OF THE P-43 SAMPLER

Date	No. Samples	Nozzle Dia., in.	Section	Stream Depth, ft.	Sampling Point	Average Velocity		
						Intake	Stream*	Ratio = $\frac{\text{Intake}}{\text{Stream}}$
12-20-43	6	3/16	Z	11.4	S	3.82	4.28	0.89
	6				M	3.63	3.86	0.94
	6				B	2.78	2.95	0.94
	6	3/16	Y	12.5	S	3.88	4.15	0.94
	6				M	3.54	3.89	0.91
	6				B	2.92	2.30	1.27
	6	3/16	X	15.0	S	3.90	4.27	0.91
	6				M	3.72	4.44	0.84
	6				B	3.06	3.24	0.94
	5	3/16	W	13.8	S	3.64	3.73	0.98
	6				M	3.32	3.62	0.92
	6				B	2.44	2.60	0.94
1- 3-44	6	3/16	Z	10.8	S	3.66	3.95	0.93
	6				M	3.45	3.53	0.98
	6				B	2.98	2.75	1.08
	6	3/16	Y	10.7	S	3.68	3.95	0.93
	6				M	3.42	3.52	0.97
	6				B	2.89	2.58	1.12
	6	3/16	X	11.8	S	3.87	3.87	1.00
	6				M	3.74	3.71	1.01
	6				B	3.62	3.14	1.15
	6	3/16	W	11.3	S	3.15	3.34	0.94
	6				M	3.11	3.16	0.98
	6				B	2.49	2.60	0.96
							Average =	0.98

*Velocity determinations made about 6 feet upstream from sampling point.

TABLE 3

COMPARISON OF CONCENTRATIONS IN
T-B AND D-43 SAMPLES

T-B Sampler						D-43 Sampler				
Date	Section	Sampling Point	No. Samples	Concentration per cent: At Point	Concentration per cent: Weighted Mean in Section	No. Samples	Average Concentration per cent		Transit Rate ft./sec.	Ratio T-B / D-43
8-17-43	—	One foot below water surface	20	0.021	—	20[a]	0.026		—	0.81
			16	0.019	—	16[a]	0.022		—	0.86
			18	0.026	—	18[b]	0.029		—	0.90
			18	0.023	—	18[b]	0.025		—	0.92
									Average =	0.87
8-19-43	V	S	12	0.017		12[a]	0.036		0.67	
		M	12	0.024	0.027	12[a]	0.046	0.041	0.67	0.66
		B	12	0.056		12[a]	0.042		0.67	
9- 1-43	W	S	18	0.009		18[a]	0.024		0.50	
		M	18	0.016	0.019	18[a]	0.017	0.022	0.50	0.86
		B	18	0.046		18[a]	0.024		0.50	
	X	S	18	0.008		18[a]	0.029		0.50	
		M	18	0.022	0.022	18[a]	0.028	0.031	0.50	0.71
		B	18	0.047		18[a]	0.035		0.50	
	Y	S	18	0.009		18[b]	0.020		0.67	
		M	18	0.009	0.012	18[b]	0.018	0.019	0.67	0.63
		B	18	0.020		18[b]	0.019		0.67	
	Z	S	18	0.009		18[b]	0.012		0.33	
		M	18	0.012	0.016	18[b]	0.017	0.016	0.33	1.00
		B	18	0.021		18[b]	0.018		0.33	
									Average =	0.77

a - 1/8-in. diameter nozzle
b - 3/16-in. diameter nozzle

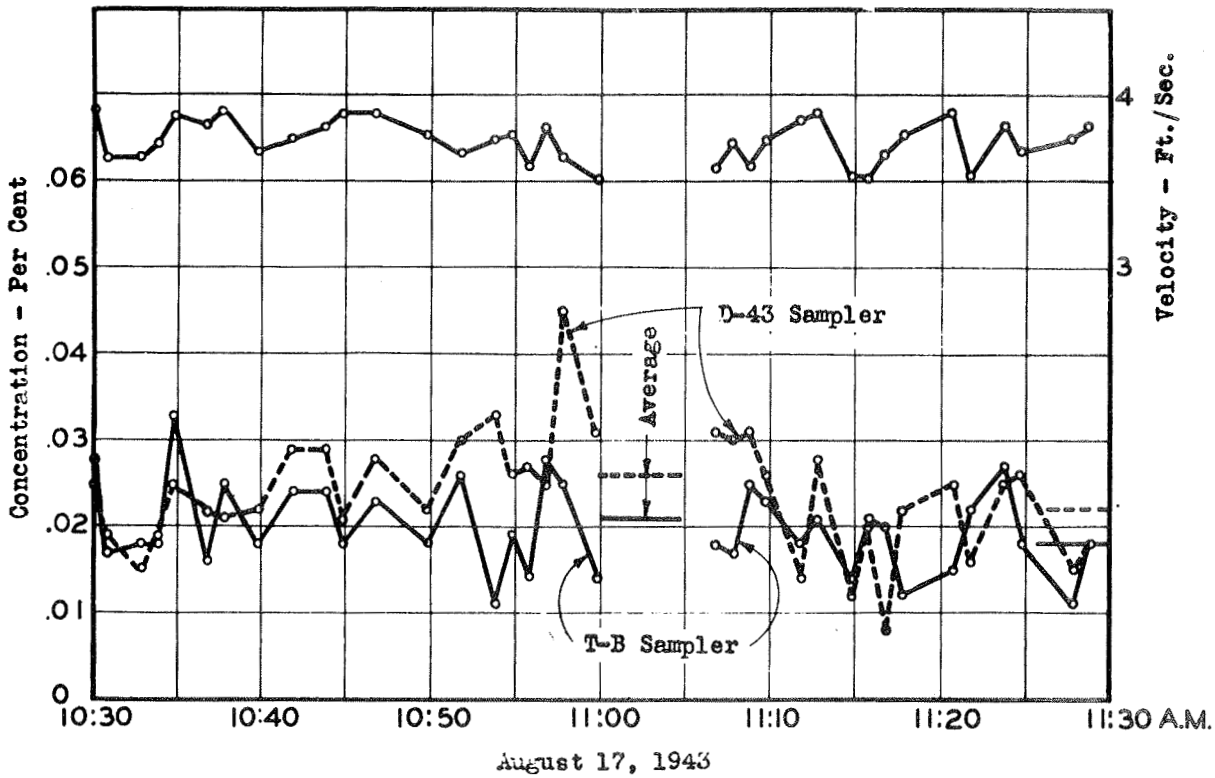

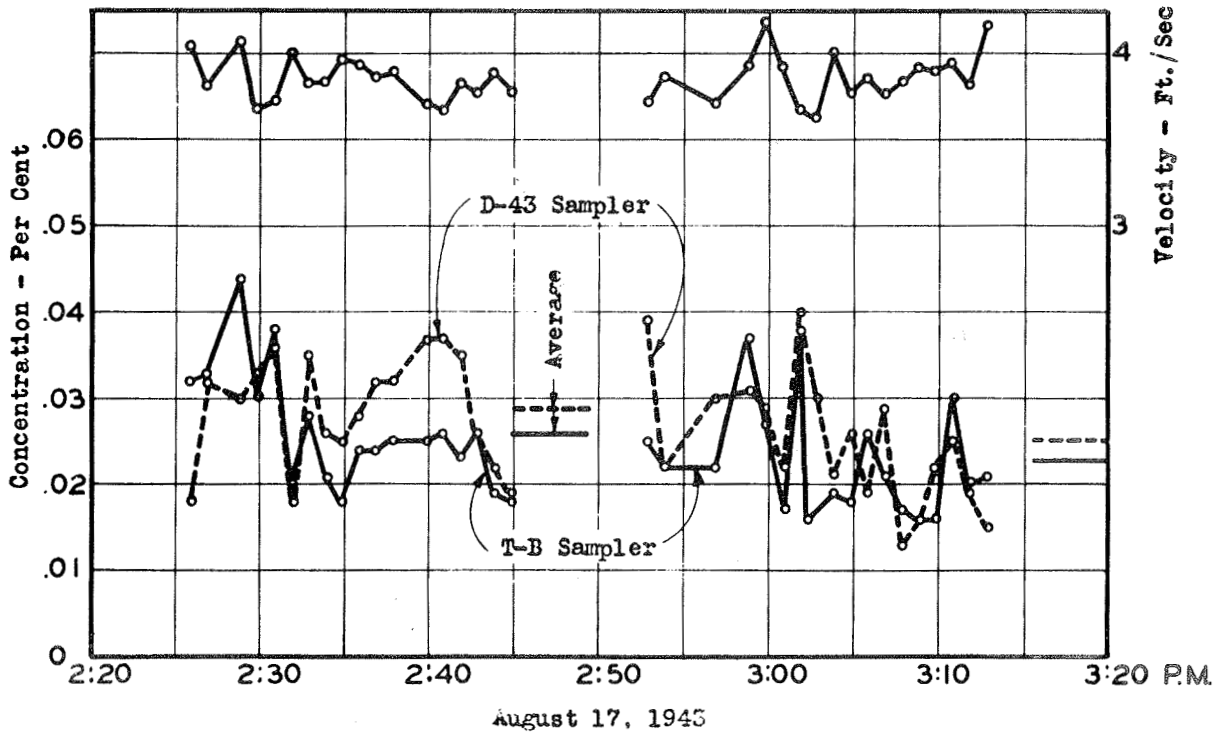

Fig. 1 - Variation of sediment concentration with time, Colorado River near Yuma, Arizona.

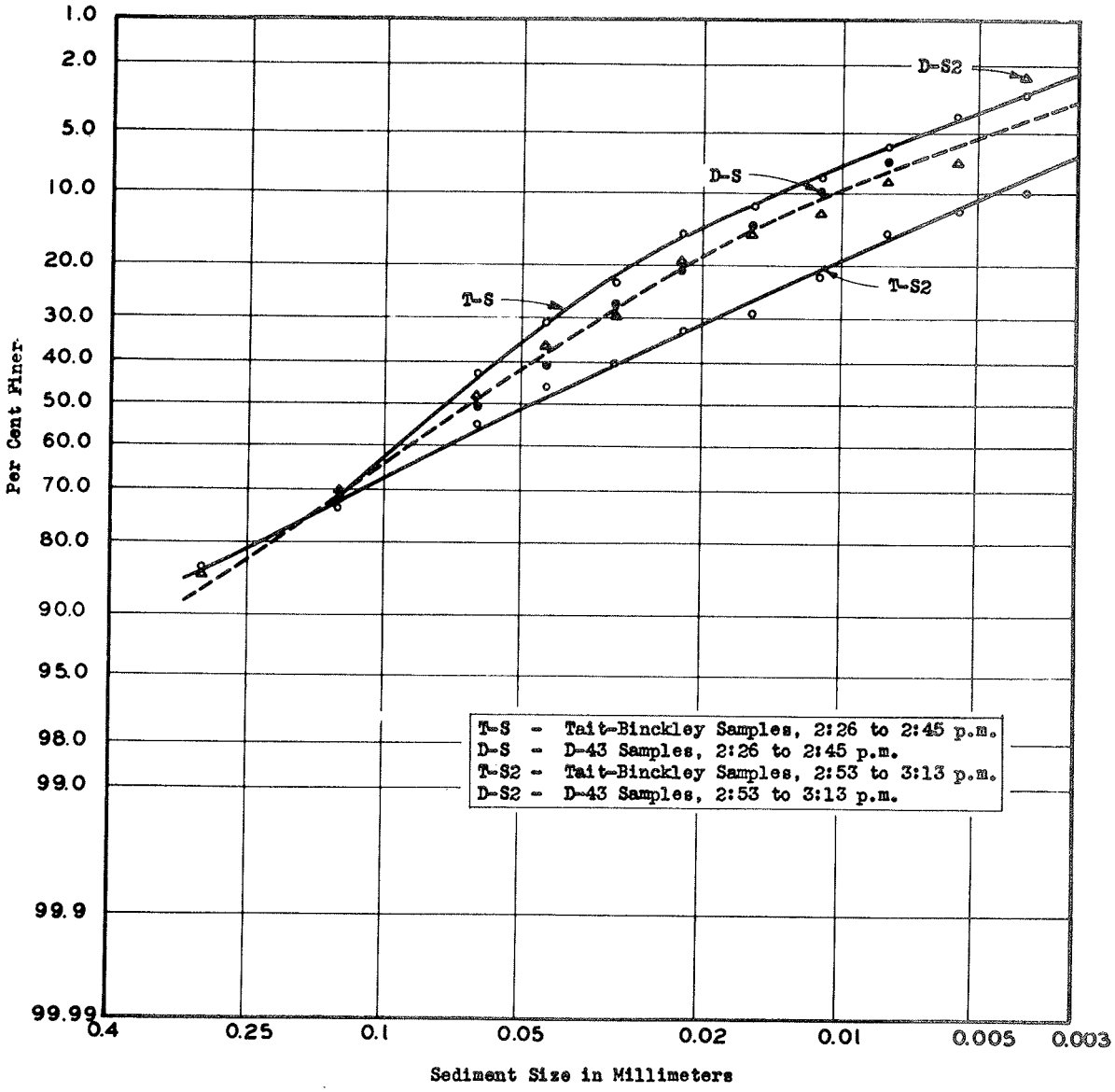

Fig. 2 - Results of size analyses of sediment in samples collected at a point one foot below the water surface on August 17, 1943.

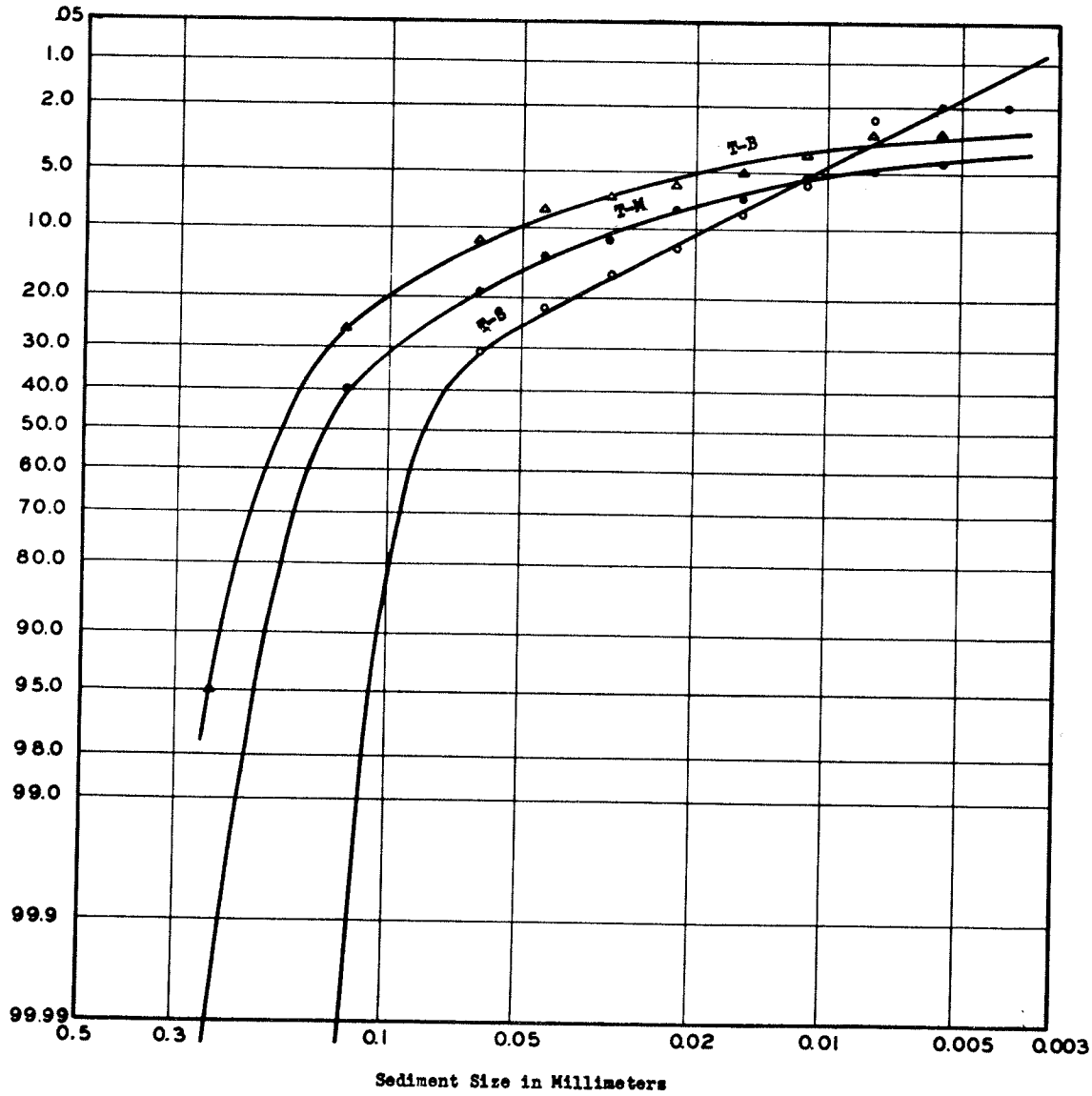

Fig. 3 - Results of size analyses of sediment in samples at points one foot below the water surface, mid-depth, and one foot above the bottom taken with the Tait-Binckley sampler on August 19, 1943.

T-B/P-43, for the samples so taken averaged 1.26. A summary of the data is given in Table 4. The variation in sediment concentration with time for a typical set of samples collected with each sampler is shown in Fig. 4.

TABLE 4

COMPARISON OF CONCENTRATIONS IN T-B AND P-43 SAMPLES

Date	Section	Sampling Point	T-B Sampler		P-43 Sampler[b]		Ratio T-B/P-43
			No. Samples	Concentration per cent	No. Samples	Concentration per cent	
12-20-43	Z	S	6	0.034	6	0.022	1.54
		M	6	0.042	6	0.052	0.81
		B	6	0.081	6	0.096	0.84
	Y	S	6	0.024	6	0.024	1.00
		M	6	0.047	6	0.038	1.24
		B	6	0.154	6	0.072	2.14
	X	S	6	0.030	6	0.029	1.03
		M	6	0.064	6	0.054	1.18
		B	6	0.059	6	0.088	0.67
	W	S	6	0.019	5	0.014	1.36
		M	6	0.029	6	0.024	1.21
		B	6	0.095	6	0.072	1.32
1- 3-44	Z	S	6	0.035	6	0.024	1.46
		M	6	0.060	6	0.049	1.22
		B	6	0.109	6	0.086	1.27
	Y	S	6	0.022	6	0.020	1.10
		M	6	0.041	6	0.038	1.08
		B	6	0.134	6	0.083	1.62
	X	S	6	0.032	6	0.020	1.60
		M	6	0.043	6	0.041	1.05
		B	6	0.117	6	0.108	1.08
	W	S	6	0.012	6	0.006	2.00
		M	6	0.026	6	0.023	1.13
		B	6	0.088	6	0.066	1.33
						Average =	1.26

b - 3/16-in. diameter nozzle

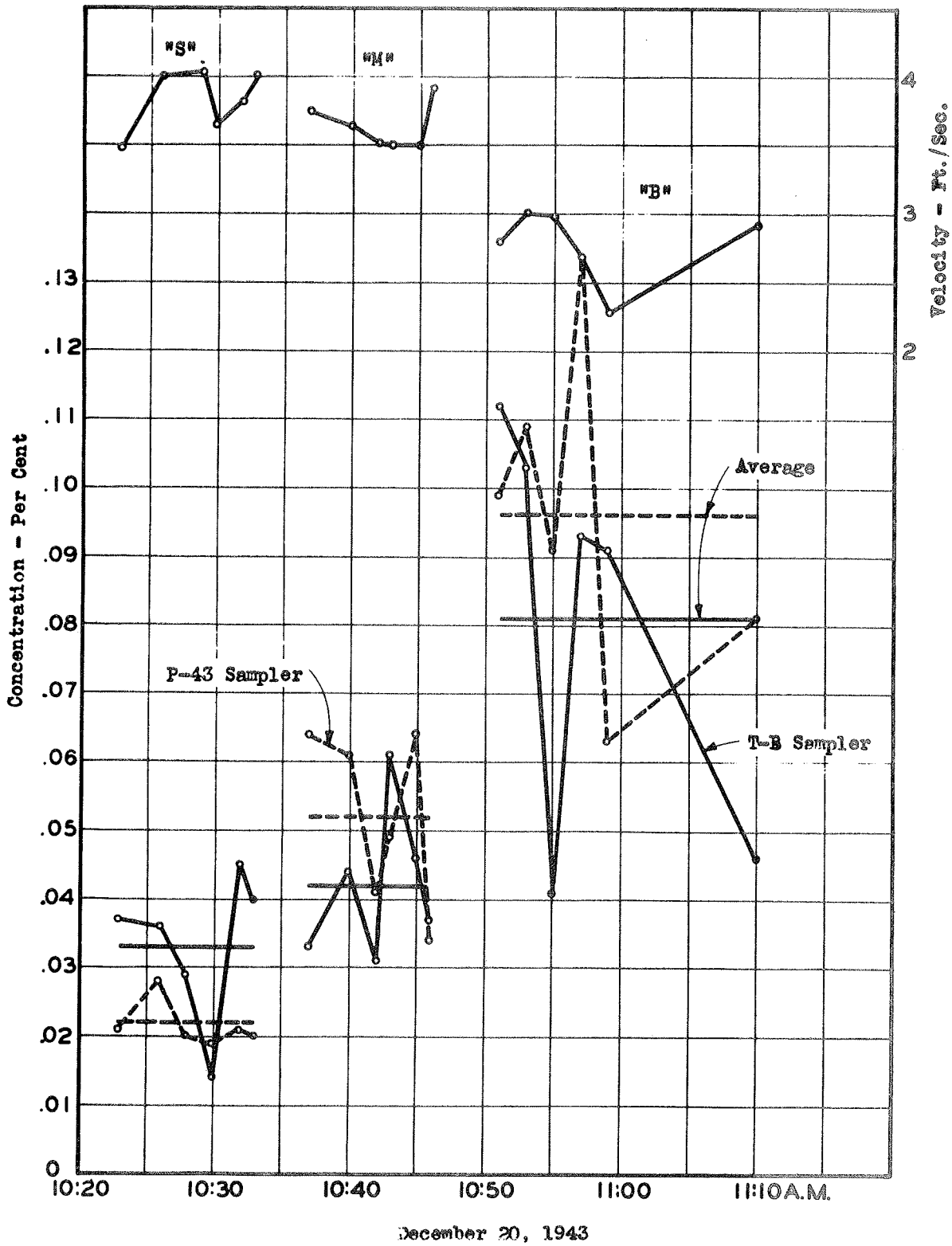

Fig. 4 - Variation of sediment concentration with time, Colorado River near Yuma, Arizona.

The results of the comparative tests made with the D-43, P-43, and T-B samplers are not consistent with the normal expectation for concentrations and sampling conditions encountered. The weighted concentration in the vertical section computed from T-B samples is consistently lower than the average obtained with the D-43 sampler. In general, the average concentrations of instantaneous samples taken with the T-B sampler are consistently higher than the average concentrations in corresponding samples taken with the P-43 sampler. The reason for the weighted concentrations in the D-43 samples being lower and the concentrations in P-43 samples being higher than concentrations in samples obtained with the T-B sampler is not evident at this time.

Inasmuch as size analyses of the comparative samples taken with the P-43 and T-B samplers have not been completed, no attempt is made to explain the lack of agreement between concentrations in these groups. However, size analyses have been made of the comparative samples taken with D-43 and T-B samplers, and the following comments are offered by the Bureau of Reclamation on lack of agreement between concentrations:

"1. Because of instantaneous fluctuations in concentration, considerable difference might be expected in each pair of comparative samples. However, in averages of 6 pair, 12 pair, etc., the differences should be compensated.

"2. It is probable that three Tait-Binckley samples in a vertical are insufficient for determining the true weighted mean concentration in the vertical, but this factor could account for only a small percentage of the inconsistency shown.

"3. Size analyses of the depth-integrated samples indicate that the D-43 sampler received excess fine material as compared with the Tait-Binckley. This might indicate that the Tait-Binckley had sampled too close to the bottom and picked up excess coarse material, in which case the ratio of T-B to D-43 should be greater than 1.0. Actually, however, in all but one of the groups, the ratio is less than 1.0. Therefore, none of the error can be attributed to this cause.

"4. In a sampler without removable containers, such as the Tait-Binckley, there is always the possibility that some material may adhere to the sampler each time a sample is transferred to its container. With the small concentrations existing in the Colorado River at Yuma, loss of a small amount of material would cause an appreciable percentage error.

"The most likely cause of the discrepancy in the depth-integrated samples, and in the group comprising the first 36 pair of point samples of August 17, 1943, appears to be that mentioned in (4) above. In the second group of point samples of August 17, the ratio of T-B to D-43 is 0.91, and the ratio of intake to stream velocity is 1.11. From this information, it would be reasoned that the D-43 samples would be deficient in coarse material (that is, they would contain too high percentages of fine material). However, the size analyses indicate that they contain a smaller percentage of fine material than the

Tait-Binckley samples. Therefore, no explanation for the lack of agreement in this group can be offered."

Although no direct comparisons were made between concentrations obtained with the D-43 and P-43 samplers, the indirect comparison with concentrations in T-B samples indicate an appreciable difference between the two types of sampling equipment. However, inasmuch as the data submitted are inconclusive regarding the true sampling ratios of the T-B to the P-43 and D-43 samplers, the indirect comparison of the P-43 and D-43 samplers on the basis of these data is not justified. A few comparative field tests made by the Geological Survey* at the station on the Green River at Green River, Wyoming, indicate little or no difference between the two samplers, but appreciable difference was noted in the results obtained at the station on the San Juan River near Bluff, Utah. However, the results for the latter station were not consistent, and the number of tests made at both stations was too small to be considered indicative of the relative efficiency of the two types of sampling equipment.

The Bureau makes the following comments and recommendations relative to the US sampling equipment:

"b. The D-43 sampler apparently can be operated and handled satisfactorily. Samples were taken in stream velocities of 2 to 4 feet per second. Weight and construction of the sampler appeared to be suitable for this range. In using the P-43 sampler, some difficulty was encountered with operation of tripping mechanism due to short distance of drop, and with the winding key due to badly worn slot and danger of losing key. The jar container of the P-43 sampler is machined to such a close fit that some jars could not be used; an increase of 1/16 of an inch in diameter of the opening would be desirable.

"c. Either the milk bottle or fruit jar container is satisfactory, but it is recommended that one or the other be chosen as standard so that all samplers will utilize the same type. As to size of container, it is suggested that consideration be given to design of samplers using quart containers, in order to reduce required transit rates for the D-43 sampler and to permit use of larger nozzles when necessary.

"d. Because of trouble encountered with the tripping and winding mechanisms, it would be desirable to provide for electrical operation of the valve, if possible."

The base data covering the field tests and some size analysis determinations are included in Appendix C.

5. Office of Indian Affairs--The Office of Indian Affairs indicated by letter dated 12 April 1944 that, owing to the limited personnel available, no

---

* "Preliminary Field Tests of the US Sediment Sampling Equipment in the Colorado River Basin," by P. C. Benedict, U. S. Geological Survey.

field tests were made with the D-43 sampler. However, it was anticipated that at some time in the future, tests would be made in the southwestern section of the United States.

6. Field tests by the Tennessee Valley Authority--Field tests were conducted by the Authority only on the P-43 sampler. However, samples were collected at the same time with samplers now used by the Authority for comparison as to the practicability of the P-43 sampler. It is assumed the other samplers used are similar or identical to those described on pages 135 and 136, Report No. 1 of the series issued in connection with the joint sediment investigation. The results of the field tests made by the Authority are discussed in reports submitted to the U. S. Engineer Office, St. Paul, Minnesota, 11 May and 26 June 1944, which accompany this report as Appendix E.

The field operation of the experimental P-43 sampler in its present form was considered unsatisfactory by the Authority. The report states that sediment deposited in the nozzle while the sampler was being lowered to the sampling point and prior to opening the valve. This sediment was flushed into the container when the valve was opened and seriously affected the accuracy of the samples collected. However, no quantitative tests were made to determine the extent of the error introduced. The open section of the nozzle where deposition takes place has a volume of about one cubic centimeter. The adverse effect of the concentration of a 400 cubic centimeter sample, the average volume of sample collected in a one-pint container, may be appreciable for certain sampling conditions, but, generally, it would probably not exceed the limits of accuracy in the present methods used in measuring stream flow. It would be possible to prevent deposition of sediment in the nozzle by allowing water to flow through the intake and a by-pass at the valve back to the stream whenever the valve is in the closed position. This expedient would further complicate the design of the valve, and, therefore, it is not recommended unless quantitative tests indicate that an appreciable improvement in sampling accuracy would be obtained.

The Authority report states that the intake nozzle is too delicate and would be rather easily damaged by striking bridge rails, piers, etc. If the nozzle were damaged, it could be replaced easily, and when made in quantities, they would be relatively inexpensive. On the other hand, it has been assumed that a sampler would receive at least as careful treatment in the collection of sediment samples as the current meter does in making discharge measurements and, therefore, this objection is not considered serious.

The need for a crane to operate the sampler was indicated in the TVA report, and the statement was made that a sampler supported by a hand line is more satisfactory for small streams and narrow bridges since the operation is much simpler and faster. The collection of samples in streams of appreciable depth and velocity obviously will require the use of a crane unless the samples are collected at or near the surface. The use of permanently installed sounding reels with sediment sampling equipment has been found very practicable by the U. S. Geological Survey in Iowa. This type of installation, which is described in Appendix B, undoubtedly would be justified at any regular sampling station on a small stream where local conditions are suitable.

In collecting samples with the P-43 sampler, the Authority found that it was necessary for the operator to collect several samples in order to determine the proper time interval to fill the container. After some field experience with the sampler, it is believed that this problem would not be difficult. The velocity in the nozzle at point of intake approximates the stream velocity at the sampling point. Therefore, with curves showing the filling time with respect to velocity, it is a relatively simple matter to determine the proper sampling time when the approximate stream velocity is known. It should also be pointed out that a sample need not necessarily be discarded because the container is less than full. A sample of any size can be used provided the container does not overflow before the sampling operation ceases. It is possible that a leaf or other debris may temporarily stop the flow in the nozzle during the sampling process. However, if the inflow is entirely cut off, there will be no adverse effect on the sample except for the smaller quantity collected. If the velocity in the nozzle at point of intake is appreciably reduced for an appreciable part of the sampling interval, some error would be introduced, the magnitude depending on stream velocity, particle size, etc. However, this is not characteristic of the P-43 sampler alone but all types of samplers present the same difficulty to varying degrees when used in collecting samples in debris laden streams.

The TVA report pointed out that the removability of the sample container was the best single feature of the sampler. However, it was recommended that the sampler be adapted for pint milk bottles, since they are more rugged than the mason jars and the caps afford a convenient place to label the samples. This recommendation is in accord with the other agencies who have tested the sampler.

Other criticisms offered regarding the use of messenger weights, winding mechanism, valve mechanism, suitability of sampler for certain conditions of flow, and the extra personnel required for field operation, can be eliminated if the sampler were designed to operate electrically.

Concentrations of samples collected by the Authority with the P-43 sampler are given in Appendix E. Apparently, samples were collected also with the samplers now used by the Authority, but the sediment analyses were not submitted with the report. It is only stated that the sediment content of samples collected with the P-43 sampler was sometimes greater and sometimes less than in corresponding samples collected with sampling equipment now in current use.

It was suggested by the TVA that the sampler finally evolved should be made satisfactory for the widest variety of field conditions as well as be correct from a theoretical viewpoint.

7. Field tests by the U. S. Engineer Office, Huntington, West Virginia--Comparative field tests on the P-43 and Ohio River Division samplers conducted by the Huntington Engineer District are described in Appendix F. The ORD sampler is shown on pages 10 and 11 of Appendix J. The sample container, a glass jar of 1-quart capacity, is clamped upright in a circular metal band at the

forward end of a flat steel bar, which, in turn, is fastened to the hanger bar and tail vane of a regular sounding weight. The intake tube, an assembly of brass tubes and fittings, is attached vertically to a bronze screw cover on the sample jar. The tube is bent 90° about 3 inches above the cover and ends in a tapered nozzle pointed in the upstream direction. The air exhaust, of almost identical construction, also ends in a brass nozzle pointed upstream at an elevation about 1 inch above the fluid intake nozzle. Each tube is equipped with a brass cock, the handles of which are linked together and normally held in the open position by a spring. A catch arrangement when applied to the common link holds the valves in the closed position. The catch is released by energizing an electromagnet and the spring throws the valves into the open position. The current supply is furnished by dry cell batteries.

In operation, the sampler is used as a point-integrator. It is lowered to the sampling point with the valves closed. At the specified submergence, the electromagnet is energized, releasing the catch and the valves open. With this design, initial inrush occurs and a larger or smaller proportion of the sample, depending upon the depth of the sampling point, is obtained almost instantaneously after the valves are opened. Some sediment will be lost, and the sample taken during this period will indicate a lower concentration than that existing at the sampling point. Subsequently, the sampling takes place at a slower rate, but at a rate neither equal nor proportional to the stream velocity. Owing to the fact that both the intake and air exhaust nozzles are pointed upstream, both orifices are subject to equal impact pressures. The air in the container escapes through the upper orifice due to the lower hydrostatic pressure at that point and its own bouyancy. The differential pressure on the orifices being constant, irrespective of velocity, at all practicable depths, the rate of inflow is uniform and under ordinary conditions considerably slower than would be indicated by the stream velocity. Consequently, the stream lines diverge at the intake nozzle, and the sample taken during that period would be expected to contain a disproportionately large amount of sediment. The errors resulting from both of these faulty features, although opposed in sign and therefore to some extent compensatory, increase with increasing particle sizes and become insignificant for very fine sediment.

When the sample container is filled with fluid and all air has escaped, the filling automatically ceases. Since the valve operating mechanism does not provide for automatic or mechanical closure of the valves, the air exhaust tube has been turned upstream to avoid circulation through the sample container after it is full. Whether circulation stops completely is questionable, but even if it does, there is the possibility that the sample will be contaminated by deposition of sediment in both nozzles after the filling action ceases as long as the sampler remains in the stream.

The sample jar is posed in a precarious position both in and out of the water, and its lack of streamlining offers considerable resistance to the current. However, the sampler is very simple to operate, can be constructed cheaply, and is easily interchanged with the regular stream gaging equipment. It can be mounted on larger or smaller sounding weights to satisfy various stream conditions. In contrast to these desirable features, it violates most of the basic principles of accurate sediment sampling.

One series of comparative field tests with the P-43 and ORD samplers was made 2 May 1944 in Levisa Fork of Big Sandy River at Louisa, Kentucky. Two stream gaging derricks were set up side by side on the bridge over the deepest point in the stream and ten pairs of samples were taken with the samplers operating simultaneously. The samplers were then interchanged and ten additional pairs of samples were taken. Vertical velocity curves were observed before sampling, during the interval between the two sets of samples, and after completing the sampling. The river stage was stationary during the test.

Another series of tests was made 7 June 1944 when a complete suspended sediment measurement was made at three vertical stations in the Ohio River at Huntington, West Virginia. The two samplers were operated simultaneously.

The Huntington report states that the conclusion reached on the basis of these tests are substantially the same as those expressed in the report by the Tennessee Valley Authority. The results of the field tests made by the Huntington District are summarized in Table 5.

TABLE 5

SUMMARY OF FIELD TESTS ON ORD AND P-43 SAMPLERS

Station	Sampler	Sediment Load lbs./sec.	Sampling Ratio ORD/P-43
Levisa Fork of Big Sandy River at Louisa, Kentucky			
3+36	ORD	0.157	
3+33	P-43	0.1776	.89
3+33	ORD	0.1515	
3+36	P-43	0.166	.91
Ohio River at Huntington, West Virginia			
9+00	ORD	0.12833	
	P-43	0.14263	.90
12+50	ORD	0.16156	
	P-43	0.16050	1.01
15+60	ORD	0.0800	
	P-43	0.08192	.98
		Mean Ratio	.94

The comparisons indicate that the samples taken with the ORD sampler contain about 6.0 per cent less sediment than those taken with the P-43 sampler. The information furnished does not indicate the reasons for this discrepancy. If size analyses were available, it might be possible to estimate the effect

of initial inrush on the sediment concentration of the ORD samples, which is believed to be an important factor. On the other hand, as stated in the report, circulation through the P-43 sampler may have occurred due to delay in closing the valve after the container was full, thus resulting in a heavier than normal concentration in the P-43 samples. If the time of sampling throughout the vertical was based on the filling rate at the bottom of the stream, it is very likely that circulation did take place at the higher levels in the stream, because, the velocities being higher, the container would be filled in a shorter time. The sampling time should have been gaged according to the stream velocity so that the container would be not quite full at the end of the sampling interval.

The Huntington District suggests that the air exhaust tube as well as the intake nozzle on the P-43 sampler be pointed upstream in order to avoid circulation through the container after it is filled. It would be desirable to have the sampler equipped to automatically stop the sampling process an instant before the container is completely filled, but the method suggested by the Huntington District would defeat the attempts that have been made to develop an integrating sampler. This expedient would result in a uniform intake velocity rather than one equal to the stream velocity, a condition which is attained in both the P-43 and D-43 samplers.

The electrically operated tripper devised by the Huntington District in August 1943 was used on the P-43 sampler during these field tests. The report states that it functioned satisfactorily except that excessive voltage was required. It is brought out that with the electrical operation the standard stream gaging reel, cable, and suspension bar could be used, which the messenger operated tripper does not permit since it requires a special connection on the sampler. The report also states that with electrical operation, the sediment sampling could be done by one man, whereas two are required with the present arrangement. The need for improvement in the design of the tail fins to minimize the tendency for the sampler to weave from side to side is also pointed out. In this connection, it is believed that the streamlining of the entire sampler body should be decidedly improved.

The method of computing the sediment discharge in a stream from data obtained with point-integrating samplers and stream gaging observations in the Ohio River Division is illustrated on page F-8 of Appendix F. Sediment samples and velocity measurements are taken at uniform intervals of depth; in these tests, 0.1 depth intervals were used. Curves are plotted to show the sediment concentration and stream velocity with respect to depth. The sediment discharge in uniform intervals of the vertical are then determined by multiplying the depth by the product of the sediment concentration and the velocity indicated by the respective curves at the mid-ordinates of the intervals. The sum of the load increments gives the total sediment discharge at the vertical in question. This method is basically correct where point-integrated samples are taken, and it is believed that the resultant determination of sediment discharge is as accurate as the base data.

8. Field tests by the U. S. Engineer Office, Tulsa, Oklahoma--Reports by the Tulsa District Engineer Office covering field tests on the D-43 and

P-43 samplers and comparative tests with the USDA Texas sampler and the Vicksburg USED horizontal toggle sampler submitted 2 May, 16 August, and 2 September 1944 are compiled in Appendix G. The USDA Texas sampler is described on page 149 and the Vicksburg sampler on page 138 in Report No. 1 of the sediment series. The relative sediment concentrations taken with the various samplers in comparable tests covered in the Tulsa District reports are summarized in Table 6.

TABLE 6

FIELD TESTS ON SEDIMENT SAMPLERS
BY THE U. S. ENGINEER OFFICE,
TULSA, OKLAHOMA

Samplers Compared	Number of Comparisons	Mean Sampling Ratio
Texas (at 0.6 depth)/D-43 (integrated)	78	1.04
Vicksburg (at 0.6 depth)/D-43 (integrated)	23	1.09
Vicksburg (Av. 3-6 points)/D-43 (integrated)	7	1.12
Texas (at point)/P-43 (at same point)	23	.97
Vicksburg (at point)/P-43 (at same point)	45	1.03
Vicksburg (Av. 3-6 points)/P-43 (Av. 3-6 points)	7	1.04
P-43 (at 0.6 depth)/D-43 (integrated)	23	1.08
P-43 (Av. 3-6 points)/D-43 (integrated)	7	1.08

The disparity in tests with low concentrations was so great in many instances as to preclude a fair comparison of the samplers. Therefore, the sediment concentration values expressed in less than two significant figures were omitted in deriving the above sampling ratios.

The only tests in these series in which similar sampling methods were used and which, therefore, afford direct comparisons of the characteristic sampler actions are the tests on the Texas at a point and P-43 at the same point and the Vicksburg at a point and the P-43 at the same point. The comparison of point samples at 0.6 depth, or the average of 3 to 6 points in the vertical, with integrated samples from the D-43 sampler is not basically justified except as a qualitative indication. The sediment concentration at 0.6 depth is not necessarily representative of the average sediment discharge in the vertical. Such a correlation would be accurate only when the sediment is uniformly very fine and uniformly distributed in the vertical, and the velocity at that point represents the mean in the vertical. Neither is the comparison of the mean of 3 to 6 point samples in the vertical with depth-integrated samples strictly accurate without weighting the point samples with respect to the velocity distribution curve of the vertical. Inasmuch as the stream velocity existing at each sampling point was not observed, this correction could not be applied to the Tulsa sediment data obtained with the point samplers.

The Texas sampler is lowered to the sampling point with a stopper closing the intake which is withdrawn when the sample is to be taken. Consequently, initial inrush occurs until the inside and outside pressures are equalized. During this period, a sample of subnormal concentration is obtained. The intake being normal to the stream flow, some sediment particles will subsequently tend also to be diverted from their respective streamlines as they enter the sampler. Also, since the container is not closed after the sample is obtained, some additional sediment will enter the container as it is raised to the surface. The error of sampling due to each of these possible sources is a function of the particle size and becomes inappreciable for very fine sediments, but on the other hand may result in considerable error if the sediments are coarse. The comparison of the Texas and P-43 samplers indicates a sampling ratio of 0.97. In view of the inherent sampling errors of the Texas sampler pointed out above, this correlation is considered satisfactory. Very probably the discrepancy would have been greater had the sediment particles been coarser. The only data submitted to indicate what sediment sizes were encountered in the Tulsa District tests are those given in the report of 2 September 1944, page G-22. In these samples, the materials were predominantly finer than 0.0625 mm. diameter. Figs. 12 and 28 in Report No. 5 show that sampling errors due to deviations from normal intake velocity and angular approach to the intake become relatively insignificant when the particles are finer than about 0.06 mm. It appears, therefore, that the sampling errors inherent in the Texas sampler under general conditions are not reflected in these comparisons due to the fineness of the suspended sediment carried by the streams at the time these tests were made.

While the Vicksburg sampler traps instantaneous point samples and the P-43 takes time-integrated samples at a point, the comparison of these instruments is also satisfactory, the sampling ratio being 1.03. The laboratory tests described in Chapter IV of Report No. 5 show that some of the sediment load carried by the flow filament which passes through the sampling tube of an instantaneous sampler, such as the Vicksburg, prior to closing the valves will be deposited in the tube and, consequently, the concentration of sediment in the sample taken will be higher than that of the instantaneous filament. However, if, as was the case in these tests, the sediment is very fine and the pause before springing the valves is short the amount of excess sediment taken will be minor.

The other comparisons in this series are of interest only to indicate that in streams carrying very fine sediment, neither the type of sampler nor the method of sampling are extremely important in obtaining satisfactory samples of the sediment load. However, the convenience and ease with which the sampler performs the operation, the selection of sampling points in the stream cross section and the period of sampling are important considerations in assuring reliable samples for determination of complete and accurate sediment discharge hydrographs.

Commenting on the physical features of the D-43 sampler, the Tulsa District states that the sampler is easily handled in and out of the water, but its operation would be facilitated in high velocities if the weight were increased 15 to 20 pounds. The sample container is considered satisfactory, the milk bottle cap being found advantageous for temporary identification of

the sample. The report states that the sampling accuracy of the D-43 sampler relative to that of the Texas sampler does not justify discarding the latter in favor of the D-43. However, it is proposed to equip each regular sediment sampling party in the District with one D-43 sampler as well as a Texas sampler. The report suggests that a wading type sampler be developed as considerable of the sediment sampling in the Tulsa District can be done by that method.

The Tulsa District reiterates the suggestion of other reports on the P-43 sampler that an electrical tripping device be substituted for the present unsatisfactory mechanical tripper and adds that the cocking arrangement would be improved by elimination of the loose winding key. It is suggested also that the weight of the sampler should be increased to about 75 pounds, that the sampler should be adapted for pint milk bottle containers, and the mechanical parts made removable for protection while the sampler is used as a depth-integrator. The Tulsa District considers the D-43 sampler more practical than the P-43 as streams in that district are not generally deeper than 20 feet.

9. Field tests by the U. S. Engineer Office, Albuquerque, New Mexico-- The results of field tests on sediment samplers conducted by the Albuquerque District Engineer Office, submitted in reports 5 May and 16 October 1944, are given in Appendix H. Comparative tests were made on the D-43, USGS Colorado, USDA Faris, and the Albuquerque wading sampler. The tests reported 5 May were made with the collaboration of Dr. C. S. Howard of the U. S. Geological Survey.

The Faris sampler is identical with the Texas sampler used in the Tulsa District and the USDA sampler described and illustrated on page 149 in Report No. 1. The Colorado sampler is described on the same page. Both samplers utilize bottles as sample containers held upright in metal frames. The Faris sampler takes a small neck bottle of 8-ounce capacity, while the Colorado sampler takes a 1-pint milk bottle. Additional mass is provided as needed by attaching sounding weights below the samplers. Both are provided with rubber stoppers. Samples are collected with the Faris sampler only at 0.6 depth. At the sampling point, the stopper in the Faris sampler is removed by pulling an auxiliary hand line. The reports do not specify how the Colorado sampler was operated but it is assumed that it was used as a depth-integrator. In moderately deep streams, the verticals are integrated both down and up, but in deeper streams, the Colorado sampler is lowered to the bottom, opened by dropping a messenger weight, and raised slowly to the surface while the integrated sample is being taken.

Both the Faris and Colorado samplers are subject to initial inrush and to loss of particles due to separation at the normal-to-flow intakes. Because the intakes are large and do not restrict the passage of air, it is believed that the containers fill very quickly. Samples cannot be taken closer than 12 to 16 inches from the stream bed. Furthermore, since the intake of the Faris sampler cannot be closed under water, the sample will be contaminated by sediment from higher strata of the stream due to circulation

as the sampler is raised to the surface. The errors due to all these sources are functions of particle size and tend to become insignificant as the particles become extremely small, but increase in importance with increasing coarseness of sediments.

The Albuquerque wading sampler was designed to meet a unique problem in connection with sediment sampling in streams of the Albuquerque District where the drainage areas in general are very steep, the runoff rapid, and the amount of sediment carried by the ephemeral streams, or arroyos, is unusually high. Concentrations of 25 per cent are common, and in some instances, samples have been taken with concentrations exceeding 50 per cent. The run in the ephemeral streams, which normally are dry or nearly so, resulting from heavy rainfall in the headwaters, usually occurs as a wall of water with a turbulent tumbling front. The crest takes place immediately after the front, and the wave recedes gradually in a period of a few minutes to a few hours. The front carries great quantities of vegetal matter, such as grass, weeds, pine needles, twigs, and even branches or small trees. The streams are usually not more than 2 or 3 feet deep.

In situations such as this, it is imperative that discharge and sediment measurements be made as quickly as possible. Obviously, the most expedient way of getting sediment samples and making current meter measurements under these conditions is by wading into the stream. To facilitate doing so, the equipment must be light and easily handled because frequently the observer will be on insecure footing and in precarious positions. The weight and any apparatus in excess of that required to support the sample container and to provide proper filling characteristics is an encumbrance to the observer.

Although the D-43 sampler was not intended for wading sampling, the Albuquerque District attempted to use it that way. It proved to be excessively heavy and cumbersome. The process of removing a bottle full of sample, capping without spilling, replacing a new container, and closing the head was extremely difficult for one person without wading to shore after each specimen was taken. In the stream, there was no opportunity to kneel or sit, and the sampler could not be rested on the stream bed while changing bottles.

In order to fill the need for a light weight sampler suitable for these conditions, the Albuquerque District has constructed an experimental hand sampler, similar to the Anderson-Einstein sampler which is described in Report No. 1, page 151. A rounded rubber plug which supports the intake and air exhaust tubes is fitted into the neck of a 1-pint milk bottle. The bottle is clamped horizontally in a metal frame that can be mounted on a current meter wading rod by interchanging with the current meter yoke. The principal features of the D-43 sampler are incorporated in the Albuquerque wading sampler insofar as the filling action is concerned, but it has not yet been determined whether or not the intake velocity obtained is equal to the stream velocity. This sampler has been found very convenient in field experiments and with some improvements in the design, it is believed that this type has a definite and practical adaptation in the field of sediment sampling. The need for such a sampler was expressed also in the report by the Tulsa Engineer District.

In the larger streams of the Albuquerque District, such as the Rio Grande, Rio Puerco, and others, rises in stage occur very rapidly with simultaneous recession of the river bottom, the bed material being set in motion both as bed-load and suspended load. Conversely, with a falling stage, the stream bed builds up rapidly. In some reaches of the Rio Grande the aggregate effect is a gradual aggradation of the stream bed which in time threatens to interfere seriously with the operation of existing local irrigation projects.

Here again, it is important to make the discharge measurement and collect the sediment samples very quickly, within a period of a few tenths foot change in stage if possible. While the D-43 type sampler is considered ideal for this type of work, where the sampling is done from a cable car or bridge, the necessity of removing the stream gaging weight and attaching the sampler at each station entails a considerable loss of time which in many instances precludes making a satisfactory meter measurement and simultaneous sampling. Furthermore, it is found very difficult for one man, expecially if a bottomless "sit down" cable car is used, to change bottles without spilling the sample, and to alternate the sampler and stream gaging weight. The work of sediment sampling at cable car stations would be considerably facilitated if equipped with the "stand up" type of car.

The Albuquerque District suggests that the D-43 sampler be constructed sufficiently heavy and streamlined so that it can be used in place of the regular stream gaging weight, thus eliminating the necessity of changing from one to the other in alternate velocity and sediment measurements. It is believed that it would be entirely practicable to design a sampler of the D-43 type so as to accomplish this dual purpose without sacrificing its utility as a sampler. It is believed also that the proximity of the current meter wheel would not have any measurable adverse effect on the sampling action. However, this opinion should be substantiated by tests prior to adoption of this type of sampler. The streamlining could be accomplished most effectively if the bottle were reclined in a horizontal position or nearly so, thus permitting symmetrical sections throughout the length of the sampler. However, in order to obtain nearly a full bottle of liquid and to prevent liquid from running out when the sampler is raised into air, either end of the intake tube must be at a higher level than the highest point on the inside of the bottle, and the air exhaust tube must be bent into the topmost segment of the bottle to permit the free escape of air. These conditions are accomplished in the D-43 sampler by inclining the bottle so that its mouth, located at the highest point in the bottle, can be reached by short straight intake and air exhaust tubes. However, in doing so, it was necessary to depress the body of the sampler and, consequently, the most desirable streamlining was not obtained.

With a head hinged as in the D-43 sampler, it would be difficult, except in very large samplers, to provide the most desirable shape of intake and air exhaust tubes, which incidentally should meet the requirement that the intake velocity be equal to the stream velocity, and at the same time attain the optimum streamlining of the body. The limited location of the hinge point probably will not permit tubes of the required length to swing

in and out of the narrow-neck bottle and out of the way sufficiently not to interfere with changing bottles. As a solution to this problem, it is suggested that a bottle recess could be provided in a cast lead or babbit metal body of the same shape as the Columbus type stream gaging weight. A molded rubber head that would complete the streamlining of the forward end of the body could be fitted with intake and air exhaust tubes. Both tubes should be of such shape as to permit filling the bottle nearly full and should be designed so as to insure an intake velocity equal to the stream velocity. The bottle would be inserted into the head, the inner plug of which would fit snugly enough in the mouth of the bottle to hold it while being placed in and removed from the recess in the body. The outer plug on the head would fit the opening in the sampler body recess so that it can be squeezed in easily by hand, and yet it should fit snugly enough to be held securely while in operation. When not used as a sampler, the rubber head and bottle could be replaced by a cast lead plug to provide additional weight if necessary for stream gaging. The bottle could be removed in either horizontal or inclined positions without danger of spilling because it would come out with and be sealed on to the rubber head. Corrugations or finger holes molded in the head may be necessary to facilitate its removal from the bottle recess. The molded rubber head design is limited to such conditions of depth and stream velocity as permit the use of the simple depth-integrating sampler; it is not suggested for use where stream conditions require bottom closing, or opening and closing valves.

The results of the field tests on the Faris, Colorado, D-43, and Albuquerque wading samplers conducted by the Albuquerque District in collaboration with Dr. C. S. Howard of the U. S. Geological Survey, reported 5 May 1944, are summarized in Table 7.

As stated in the Albuquerque report, the tests are not sufficiently extensive with respect to variations in stream conditions to warrant drawing conclusions as to the accuracy of the D-43 or any other sampler in the group. However, the sediment concentrations obtained with the various samplers in these tests indicate satisfactory mutual agreement except with the Faris sampler, which appears to take samples of considerably lower concentrations than the others. This characteristic is consistent with the facts determined in the laboratory tests on the effect of excessive intake velocity and of angular approach to the intake. The instant after the Faris container is uncorked, initial inrush takes place and during the entire sampling period, the intake filament enters the container normal to the flow lines of the stream. Both of these factors contribute to a loss of sediment, the error being a function of the sediment size and depth of sampling. Sediment size analyses submitted with the report indicate that the sediment in the Animas River was relatively fine with only about 5 per cent coarser than 0.0625 mm., whereas in the San Juan River at Shiprock, 19 to 52 per cent of the sediment load was coarser than 0.0625 mm. Although the results are not conclusive, it appears that the discrepancy between the Faris and D-43 samplers is somewhat greater with the coarser sediments. Obviously, as the sediment particles increase in size, the distribution in the vertical departs more and more from uniformity and the Faris sampler operating at 0.6 depth would obtain a sample indicating too low a concentration, as well as too low a percentage of coarse particles.

TABLE 7

FIELD TESTS ON SAMPLERS BY
U. S. ENGINEER OFFICE, ALBUQUERQUE, NEW MEXICO

River and Station	Sampler	No. of Samples	Depth of Water ft.	Velocity ft./sec.	Mean Sediment Concentration per cent	Sampling Ratio Other / D-43
San Juan	Albu.*	16	1.3-1.5	3.14 (Av.)	0.15	1.00
near Bluff, Utah	D-43	10	1.3-1.5	3.14 (Av.)	0.15	
San Juan	Albu.*	2	Surface	3.14 (Av.)	0.11	1.00
near Bluff, Utah	D-43	3	Surface	3.14 (Av.)	0.11	
San Juan	Albu.*	2	Bottom	3.14 (Av.)	0.15	.77
near Bluff, Utah	D-43	2	Bottom	3.14 (Av.)	0.195	
San Juan	Albu.*	12	2.0-2.5	3.8	0.21	1.05
near Bluff, Utah	D-43	8	2.0-2.5	3.8	0.20	
Animas	Faris	1	4.0	2.86	0.2917	.89
at Farmington, N.M.	D-43	4	4.0	2.86	0.3289	
Animas	Faris	4	2.9	3.61	0.2740	.95
at Farmington, N.M.	D-43	4	2.9	3.61	0.2877	
Animas	Faris	4	1.8	—	0.0453	.93
at Farmington, N.M.	Albu.*	8	1.8	—	0.05	1.03
	D-43	4	1.8	—	0.0487	
San Juan	Faris	2	3.2	4.02	0.2921	.97
at Shiprock, N.M.	D-43	3	3.2	4.02	0.3009	
San Juan	Faris	2	4.2	4.69	0.3704	1.02
at Shiprock, N.M.	D-43	3	4.2	4.69	0.3642	
San Juan	Faris	2	4.0	5.25	0.3222	.76
at Shiprock, N.M.	D-43	3	4.0	5.25	0.4281	
San Juan	Faris	1	1.5	2.71	0.2559	.82
at Shiprock, N.M.	Albu.*	7	1.5	2.71	0.32	1.03
	Colo.	4	1.5	2.71	0.32	1.03
	D-43	2	1.5	2.71	0.3113	

*Albuquerque experimental wading sampler

Mean Sampling Ratio - Albu.*/D-43..... 0.98
Faris/D-43..... 0.91
Colorado/D-43.... 1.03

While the sampling errors characteristic of the Faris sampler are also inherent in the Colorado River sampler, the tests made by the Albuquerque District on the Colorado sampler are not indicative. However, in tests conducted by Mr. Paul C. Benedict of the U. S. Geological Survey in 1943, described in a report entitled "Preliminary Field Tests of the US Sediment Sampling Equipment in the Colorado River Basin," dated April 1944, samples taken with the Colorado River sampler were consistently leaner than comparable samples taken with the D-43 sampler. In those tests, 50 to 80 per cent of the sediment was coarser than 0.0625 mm. diameter.

The results of field tests on the Faris and D-43 samplers in the Rio Grande, reported by the Albuquerque District 16 October 1944, are summarized in Table 8. In these tests, the mean sampling ratio for the Faris and D-43 samplers is 0.48, whereas the series reported 5 May 1944 indicated a ratio of 0.91. The size analyses show that the sediments collected in the later series of samples were considerably coarser than those taken in the earlier

TABLE 8

FIELD TESTS ON FARIS AND D-43 SAMPLERS IN RIO GRANDE

Group No.	Sampler	Number of Samples	Mean Sediment Concentration per cent	Sampling Ratio Faris/D-43
I	Faris	3	0.2344	0.55
	D-43	3	0.4234	
II	Faris	6	0.1700	.32
	D-43	6	0.5319	
III	Faris	3	0.1920	.82
	D-43	3	0.2354	
IV	Faris	17	0.1497	.38
	D-43	18	0.3947	
V	Faris	12	0.2507	.60
	D-43	12	0.4171	
VI	Faris	9	0.1274	.31
	D-43	8	0.4126	
VII	Faris	7	0.1299	.37
	D-43	8	0.3471	
Mean	Faris		0.1791	0.48
	D-43		0.3946	

tests. Consequently, it would be expected that the Faris sampler should show smaller concentrations, particularly in the ranges of larger sediment particles. Furthermore, it is stated in the report that the later series of samples were taken in the Rio Grande during the lower portion of the recession of the spring snow-melt period and that the suspended load originated primarily from lateral or bed erosion since there was little contribution from overland flow. In the light of these facts, it is assumed that the suspended load contained a large proportion of coarse material and that the distribution of sediment in a vertical probably varied considerably from the surface to the bottom. Undoubtedly, the suspension near the bottom was much heavier and coarser than at the 0.6 depth. Therefore, the Faris samples taken at 0.6 depth would not be representative of the sediment concentration throughout the vertical. Instead, they would show a smaller total concentration and a smaller percentage of large sediments than would the D-43 integrated samples. The discrepancies in these comparisons therefore are due largely to the difference in sampling methods but include also the effect of the difference in sampler characteristics.

Complete size analyses on almost all of the samples taken in these series of tests were submitted with the report. The percentage of total sample lying between the standard divisions were tabulated for all the samples taken with both instruments in each of the seven series of tests. When these percentages were plotted on semi-log graphs, the curves showed a deficiency in all size ranges in samples collected with the Faris sampler when compared with those obtained with the D-43. The largest percentage of total sample taken with the Faris sampler was found in the size range 0.0312 to 0.0625 mm., whereas with the D-43 sampler the largest percentage was in the size range 0.125 to 0.250 mm. These trends were consistent throughout the seven series of tests and are shown graphically in Fig. 5.

These comparisons, however, did not show that the actual concentration of sediment in the D-43 samples was about 100 per cent greater than in the Faris samples when particle size range is considered. The Albuquerque report states that the concentrations of sediment in the lower size ranges were not materially different but that the D-43 sampler took considerably more sediment in the size ranges above 0.0312 mm. than did the Faris. In order to study the data presented, the differences in amount of sediment found in the respective size ranges of samples taken with the two samplers were determined for each series of tests. The averages of these differences for the seven series of tests, which are shown graphically in Fig. 5, indicate that the Faris samples were deficient in sediment particles in all size ranges which would normally be expected in a sampler of the Faris type operated as it was in these tests. In the smaller size ranges, the concentrations shown in the Faris samples more nearly equal those found in the D-43 samples, the ratio being about 0.75. However, for particle sizes above 0.0625 mm., the ratio decreases to about 0.12 for all material larger than 0.5 mm. It appears evident that a considerable part of the coarse material present in the D-43 samples was obtained in the section of the vertical below the 0.6 depth which obviously would not be included in the Faris samples. Although the sampling errors inherent in the Faris sampler would be represented in these results also, they would have a lesser effect, no doubt, than the failure of the sampler to obtain a representative sample in the vertical.

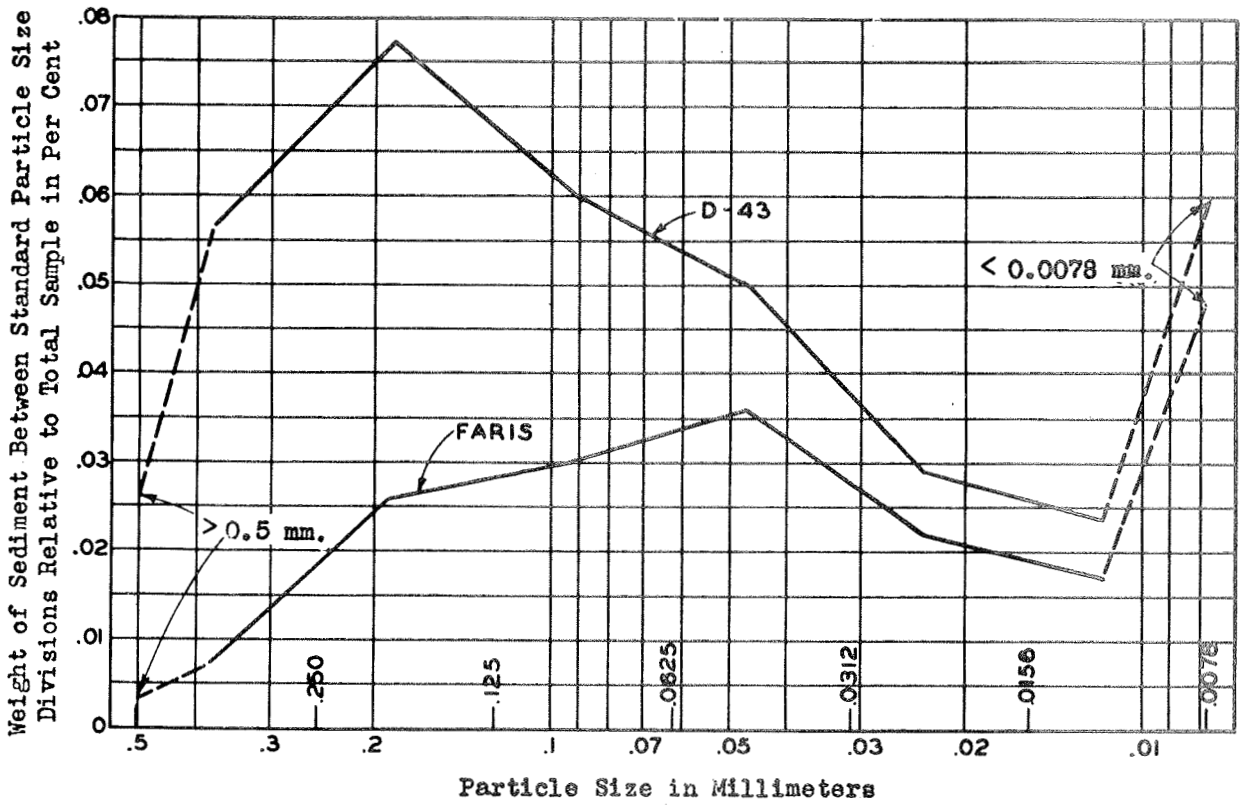

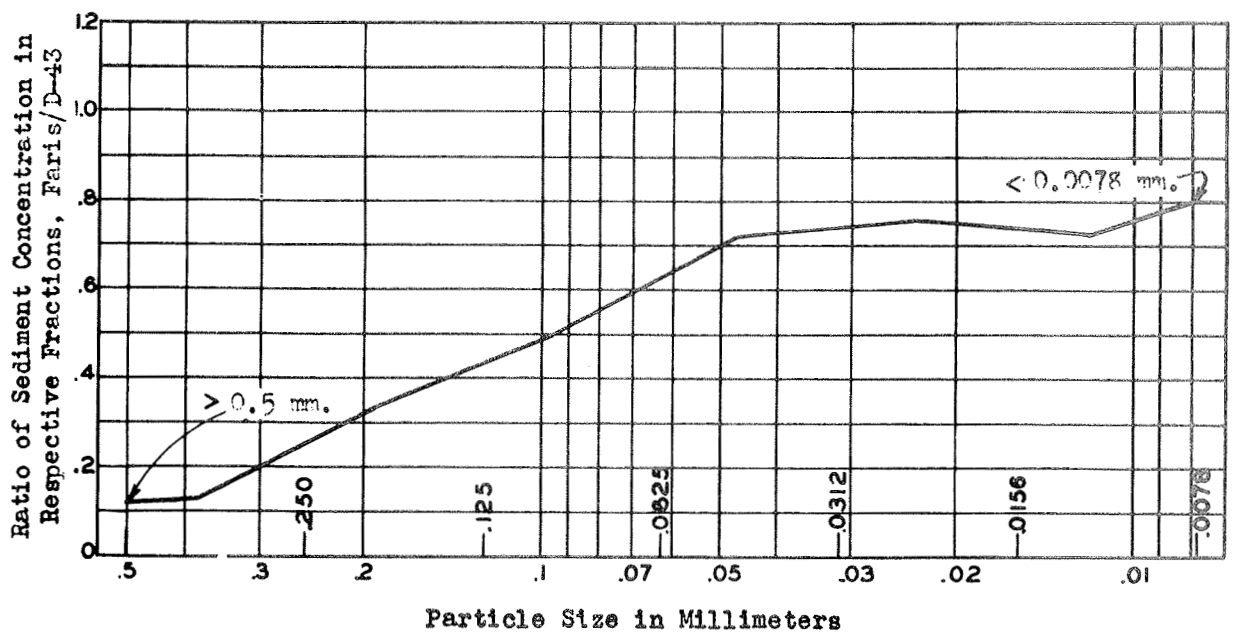

Fig. 5 - Results of comparative tests with the Faris and D-43 samplers.

U. S. Engineer Office, Albuquerque, N. M., May and June 1944,
Rio Grande, Discharge 5000 c.f.s.

The value of the data from these tests would have been greatly enhanced and more specific conclusions could have been reached if each series had been accompanied by a corresponding set of tests with a point-integrating sampler such as the P-43. However, the tests clearly demonstrate that accurate results cannot be obtained by sampling at a single point in the sampling vertical when the sediment distribution is not uniform.

The difficulties experienced in using the D-43 sampler under flood conditions are reiterated in the 16 October report. The problem of obtaining representative samples when stream velocities are high, and a heavy sediment load is carried, together with grass, roots, branches, and other debris, is not satisfactorily solved by any type of sampler now in existence. It would be equally as difficult to lower any other sampler on a suspension cable as it would be to lower the D-43 under these conditions, and clogging of the intake or fouling of the sampler operation is just as apt to occur with any other type of sampler. Despite these difficulties, it would seem extremely important to obtain samples by whatever means is possible. If nothing but dip samples can be taken, these should by all means be collected. Correlation factors determined for any part of the sampling section or during any period of the flood hydrograph would be valuable in relating the concentrations obtained from dip samples to the average concentration in the vertical section. Under the conditions described, it might be less difficult to take samples with the point-integrating sampler, P-43, than with the D-43. The P-43 could be lowered quickly to the sampling point and the sample obtained before the sampler drifts too far downstream. With the P-43 sampler, clogging of the intake could possibly be alleviated by providing one of larger size and shortening the sampling time proportionately.

In determining the sediment discharge of a stream, it is necessary to measure the stream discharge as well as the sediment concentration. Conditions which make the sampling operation difficult will in general tend also to interfere with the operation of a current meter. Therefore, an attempt to obtain greater accuracy in sediment sampling than is possible in discharge measurements under corresponding conditions does not seem to be justified.

The statement is made in the Albuquerque report of 16 October that "Accuracy can be obtained only by obtaining the average of numerous samples rather than by accuracy of individual samples." That would be true if the sampler and sampling procedure used were absolutely accurate, but it is not true if errors are introduced consistently by the particular sampler or the sampling method used.

The Albuquerque report expresses the need for an integrating sampler which will sample the heavier load of bed material near the bottom separate from the material which moves as part of the bed. In performing a sampling operation with the D-43 sampler, proper weight is given, theoretically at least, to the sediment load at each point in the vertical in proportion to the stream velocity and presumably this is true also in the region near the bottom except within the space below the nozzle when the sampler touches the stream bed. The trend of sediment variation with depth near the bottom could be determined with a sampler of the P-43 type if a study of this relation is desired.

The Albuquerque report states that "No sampler, other than a simple container to be dipped by hand, will be satisfactory for random observers." The U. S. Geological Survey in Iowa and the Rock Island U. S. Engineer District have found a satisfactory solution to a similar situation in their cooperative sediment sampling program. Each regular sampling station located at a bridge has been equipped with a D-43 sampler and a hand-operated reel housed in a box with open bottom. The equipment is mounted on the upstream bridge rail over the sampling point, usually at the thalweg or the center of discharge of the stream. Local personnel have been engaged to take the samples regularly one to three times daily or oftener on rapidly changing stages and during floods. No difficulty has been experienced in obtaining personnel capable of learning the simple technique of operating a depth-integrating sampler and sufficiently responsible to do the routine sampling according to a designated schedule of procedure. Additional samples are collected from several verticals in the cross section on days when discharge measurements are made and when samples are picked up for transfer to the laboratory, usually twice monthly. The sampling procedure and equipment used are described in detail in Appendix B and sampler installations are illustrated by several photographs. The same type of installation may not be entirely practicable for very remote sampling stations such as perhaps are necessary in the Albuquerque District, but where the facilities can be provided, the personnel who can be depended upon to take dip samples undoubtedly would be able and responsible enough to take samples also with a depth-integrating sampler. In this connection, it is believed that a substandard depth-integrated sample would be more valuable than a so-called good sample taken by an inferior method.

10. Field tests by the U. S. Engineer Office, Sacramento, California--The results of field tests conducted by the Sacramento District Engineer Office on the D-43 sampler and on a depth-integrating sampler constructed by the District are described in a report, "Comparative Sediment Sampling with U. S. Sediment Sampler D-43," dated April 1944. The report appears in Appendix I.

The Sacramento sediment sampler is similar to the so-called Rock Island improved time-integrating sampler. The body of the sampler is made of a piece of 2-inch copper tubing, encased in a lead jacket 3/16 inch thick, which serves as the sample container. The head, made of bronze, is attached by screw threads and the sampler has only a vertical tail vane. The intake nozzle, made of 1/8-inch inside diameter copper tubing, projects 2-1/4 inches forward of the head. The air exhaust, also a copper tube, forms an inverted U atop the sampler. When a sample has been taken, the head is removed and the sample poured into another container, in which process some sediment may be lost by adhering to the inside walls of the sample chamber. The sampler is easily and cheaply constructed and has a weight of about 21 pounds. It is operated as a depth-integrator, but due to the shape and position of the intake and air exhaust tubes, it is doubtful that intake velocity equal to stream velocity is obtained.

The results of the comparative tests made by the Sacramento District with the D-43 and Sacramento samplers are given in Table 9.

TABLE 9

FIELD TESTS ON SACRAMENTO AND D-43 SAMPLERS

Date	Mean Velocity ft./sec.	Depth ft.	Sampler	No. of Tests	Mean Sediment Concentration p.p.m.	Sampling Ratio - Sac./D-43
2/22/44	2.77	5.5	Sacramento	6	31	
			D-43, 1/8-in. noz.	6	29	1.07
2/24/44	2.8	13.4	Sacramento	10	10	
			D-43, 1/8-in. noz.	10	12	.83
3/14/44	1.7	8.2	Sacramento	5	7	
			D-43, 3/16-in. noz.	5	14	.50
3/15/44	3.3	13.8	Sacramento	2	54	
			D-43, 3/16-in. noz.	5	59	.91
3/22/44	3.2	13.4	Sacramento	5	16	
			D-43, 3/16-in. noz.	5	19	.83
3/23/44	2.4	6.4	Sacramento	5	10	
			D-43, 1/8-in. noz.	5	4	2.50

The wide discrepancies in sampling ratios indicated by these comparisons may be due to one or more of several factors. The sediment concentrations were extremely low, and small variations in the suspended load occurring between the sampling periods for the respective samplers would produce relatively large variations in the sampling ratios. When the sediment concentration in the stream is low, the loss of any particles which adhere to the inside walls of the Sacramento sampler would have an appreciable effect on the concentration indicated by the analysis. It is noted in the report that in Test No. IV, 3 samples were discarded because the sampler had not been properly cleaned prior to taking the samples. A particular sample might be surcharged with sediment left in the sampler from a previous operation, or it might loose sediment because particles remain in the chamber when the sample is poured out.

The method used in analyzing the samples in these tests is also subject to errors and may in this case be the principal cause of the wide variation in sampling ratios. It is noted in the report that only a fraction of each sample was analyzed for sediment content. The sample was stirred thoroughly by means of an electric mixer and then the specimen for the analysis was

drawn off with a pipette. It is believed to be virtually impossible to accurately divide a sample of water-sediment mixture by this method, particularly if the sediments are coarser than fine silt. The entire sample should be used in the analysis. The drying process could be shortened by decanting as much of the clear liquid as possible after allowing a considerable period for the sediment to settle. The balance of the liquid should then be evaporated, correcting the weight of residue for dissolved solids, or all the liquid could be filtered through a Gooch crucible.

The Sacramento District report indicates that the 38-lb. D-43 sampler is well suited for general use and that the 1-pint milk bottle is satisfactory as a sample container.

11. Field tests by the U. S. Engineer Office, Cincinnati, Ohio--Comparative field tests with the D-43 and Ohio River Division samplers conducted by the Cincinnati District Engineer Office are described in a report, "Field Tests of U. S. Sediment Sampler D-43," 12 June 1944, which appears as Appendix J. The ORD sampler, which is used in all routine sediment sampling in the Ohio River Division, was described in the discussion of field tests by the Huntington Engineer District. However, the ORD sampler used in the Cincinnati District tests was operated by messenger weights and not by an electromagnet as in the Huntington District tests. The Cincinnati District made only one series of tests for comparing the sediment concentration in samples taken under similar conditions with the D-43 and ORD samplers. Twenty-two depth-integrated samples were taken in a single vertical with the D-43 sampler. Thirteen point samples were taken with the ORD sampler at a vertical 8 feet distant, two sets at 0.2 and 0.8 depth, and one set at each tenth-foot interval in the vertical to 0.88 depth. The data derived from these tests indicate practically identical sediment concentrations caught by the two samplers, the mean sampling ratio, ORD/D-43, for the entire series being 0.98. For the series of point samples taken at tenth-foot intervals and the corresponding D-43 integrated samples the ratio is 1.00. The mean size analyses obtained with both samplers are also in close agreement.

The virtual agreement in the performance of the two samplers indicated by these data does not necessarily prove that one is equally as accurate as the other. During the initial inrush period, the ORD sampler would tend to draw less than the existing sediment concentration, whereas during the balance of the sampling period, it would draw a proportionately heavier concentration than exists at the sampling point. These errors are compensatory to a degree; the former decreases in relation to increasing stream velocity, whereas the latter increases. Both errors decrease with decreasing sediment size. The size analyses of selected samples from these tests show that the sediment was extremely fine; in all cases less than 1 per cent was coarser than 0.053 mm. Furthermore, the velocity and sediment distributions in the vertical were both very uniform. Under these conditions, the faulty features of the ORD sampler would not be reflected in the results.

The Cincinnati District suggests that the D-43 sampler be adapted for a pint or quart sample container of the wide mouth fruit jar type and that

the weight of the sampler be increased to 100 pounds. A modification of the hanger attachment is also suggested to permit tipping the sampler upright so as to facilitate changing the container. An expedient method by which an observer can easily change the sample container alone is discussed in Appendix B. Inasmuch as power-driven hoisting equipment is used, the heavier sampler could be handled without difficulty. The river depths at most of the sampling stations are greater than 19 feet and, therefore, the depth-integrating sampler should be equipped with a bottom closing or bottom opening device which would permit sampling to depths of about 38 feet. Where the depths are greater than 38 feet, which is frequently the case in this area, a point-integrating sampler with pressure equalizing chamber should be used. In view of the preponderance of depths greater than 19 feet in the Cincinnati District, it appears that a point-integrating sampler of the P-43 type with indicated improvements would prove more feasible than a depth-integrating sampler because it could be used to take both point- and depth-integrated samples.

12. Field tests by the U. S. Engineer Office, Rock Island, Illinois--The results of field tests conducted by the Rock Island Engineer District for comparison of the sampling characteristics of the D-43 and the Rock Island simplified time-integrating samplers were reported in a letter dated 25 August 1944 which appears in Appendix K. The Rock Island sampler is described and illustrated on page 156 in Report No. 1 of the sediment study series. The sample container is a cylindrical recess formed by a brass pipe encased in a streamlined lead shell. The forward end is closed except for a 1/4-inch brass intake tube, while a removable brass cap with vertical tail vane attached seals the downstream end. Vertical vanes are attached also above and below the body of the sampler. In Report No. 1, the sampler is shown with horizontal vanes also, but tests have been made recently which indicate improved operation when these are removed. Presumably, this change has been made on all the samplers now in use. With these fins removed, the sampler exhibits less tendency to point in the direction of transit and thus reduces the possibility of the intake nosing into the stream bed when reaching the bottom. The intake on the Rock Island sampler, illustrated in Report No. 1, was a 1/4-inch brass tube faced off flush with the upstream end of the body, but, subsequently, each sampler has been equipped with a 1/4-inch brass intake nozzle extending 1 inch forward of the body. The air exhaust is a brass vent cock which points downstream to provide suction for evacuation of air from the sampler. By adjustment of the cock, the rate of air flow, and consequently the rate of filling, is controlled. The weight of this sampler is about 28 pounds.

The Rock Island sampler is operated as a depth-integrator. It is lowered at a uniform rate to the stream bed and raised again at a uniform rate to the surface. The rear cap is removed and the sample poured into a glass fruit jar for shipment to the laboratory. During the transfer, the operator holds a finger over the intake nozzle to prevent the sample running out, shaking the sampler periodically to agitate the liquid so as to avoid loss of sediment by adherence to the inside walls of the container. Even though these precautions are taken, it is practically impossible to flush

all the sediment out of the intake tube and forward end of the sample recess. Aside from the loss of sediment during the transfer of the sample, the results obtained with the Rock Island sampler should be fairly comparable with those of the D-43, provided the filling rate can be adjusted to equal the stream velocity.

The results of the comparative tests made with the Rock Island and D-43 samplers are summarized in Table 10.

TABLE 10

SUMMARY OF FIELD TESTS ON SEDIMENT SAMPLERS
BY THE U. S. ENGINEER OFFICE, ROCK ISLAND, ILLINOIS

Date	Location	Sediment Concentration p.p.m.		Sampling Ratio RI/D-43
		RI	D-43	
5/12/43	Mississippi River at Dubuque	32.0	47.2	.68
5/18/43	Mississippi River at Dubuque	75.6	88.5	.85
5/12/43	Wapsipinicon River at De Witt	106.8	62.1	Void
5/18/43	Wapsipinicon River at De Witt	964.3	665.6	1.45
5/25/43	Wapsipinicon River at De Witt	256.3	225.4	1.14
5/25/43	Wapsipinicon River at De Witt	269.3	207.7	1.29
5/25/43	Wapsipinicon River at De Witt	268.9	194.8	1.38
7/31/43	Iowa River at North Liberty	607.1*	574.3*	1.06
7/31/43	Iowa River at Iowa City	313.6*	268.4*	1.17
			Mean =	1.13

*Mean of 5 samples

In all of these comparisons where size analyses are given, save the Mississippi River test 12 May 1943, the Rock Island sampler consistently showed a greater proportion of sediment larger than 0.074 mm. than did the D-43 sampler. If the sediment fractions larger than 0.074 mm. are excluded, the mean sampling ratio becomes 1.04 instead of 1.13. The report states that both samplers touched the bottom of the stream on every test. These facts suggest the possibility that the Rock Island sampler may have taken in an excessive proportion of the material in suspension immediately above the stream bed. The sampler may have stirred up the bed-load, or the intake nozzle may have nosed into the bed material. If the air exhaust was restricted so as to retard the filling rate appreciably, this would tend also to increase the proportion of coarse sediment in the samples. Further investi-

gation of these possible sources of error should be made and a correlation factor determined for sediment data already obtained with the Rock Island sampler.

13. Field tests by the U. S. Engineer Office, Omaha, Nebraska—Field tests conducted by the Omaha Engineer District for comparison of sampling characteristics of the D-43 sampler with those of various Omaha samplers are described in reports dated 13 March, 27 April, and 29 September 1944, which appear in Appendix L. The results of a few tests with the P-43 sampler are also given in the report of 29 September.

The regular Omaha sampler is a hollow, streamlined cast steel shell with attached vertical and horizontal fins and a hoisting bracket. A recess open to the top is provided for a one-pint glass sample jar. The rest of the shell is filled with lead to give a total weight of 38 to 50 pounds. The sample jar has a cast brass, screw cover with a vertical intake, flush with the top surface, and an air exhaust tube which projects vertically about 1-1/2 inches. The end of the air exhaust tube has a 60° bevel on the downstream side. A cork, guided by a central stud mounted on the under side of the cover, floats on the surface of the water sample and closes both the intake and air exhaust when the jar is full. Since no other valve is provided on either passage, some water is taken in as the sampler is lowered to its sampling position.

The Omaha sampler is operated as a point-integrator, although the samples obviously are contaminated by inflow from higher strata during the descent to the sampling point. Three samples are taken in verticals less than 10 feet deep, and five are taken in verticals more than 10 feet deep, at depths selected to obtain average values of sediment concentration in the verticals. The verticals are located at mid-ordinates of segments carrying equal discharge in the cross section, the number of segments depending upon the width of the stream.

One of the Omaha samplers has been fitted with an extension of the intake tube which is pointed forward at about 3 inches above the body of the sampler. The air exhaust tube is similarly pointed downstream at about the same level. Each tube is provided with a shut-off cock which can be closed against an opposing spring and locked with a catch. When the catch is released by energizing a small solenoid, both cocks are thrown open by the spring. The valves can be closed only manually. This instrument has been designated the "instantaneous" Omaha sampler to distinguish it from the regular.

The instantaneous Omaha sampler is operated in the same manner as the regular except that the valves are kept closed while it is lowered to the sampling position, then opened by the electrical tripper. With the opening of the valves the usual initial inrush takes place after which the sampling continues at a slower rate until the intake tube is closed by the cork float. The intake nozzle and the air exhaust of the instantaneous Omaha sampler are exposed to the flow lines in a stream approximately the same as those of the

D-43 sampler, except for their position relative to the body of the sampler. If the former were operated as a depth-integrating sampler and its intake velocity were equal to the stream velocity, which is uncertain, samples taken with it should be comparable with those taken with the D-43 under similar conditions.

Another Omaha sampler has been fitted with a 3/16-inch intake tube which faces into the current. The sampling point is located about 2-1/2 inches above and 4 inches forward of the intake orifice in the regular Omaha sampler. The air exhaust tube is about 4 inches high and beveled downstream at the top. Neither the intake nor the air exhaust tube is equipped with a closing device other than the regular cork float. This instrument which is designated the "modified" Omaha sampler, is operated in the same manner as the regular.

During the summer of 1943, the Omaha District used the D-43 sampler and the regular Omaha sampler concurrently in field operations at several sampling stations to compare their performance. Consecutive samples were taken with the two instruments, one following the other as quickly as possible. In addition to these general comparisons, seven special series of six to ten samples were taken with each sampler in the Missouri River at Omaha. Both the 1/8-inch and 3/16-inch nozzles were used in the D-43 sampler and the results were compared separately with the regular Omaha sampler. The results of these tests were submitted in a letter to the Office, Chief of Engineers, dated 13 March 1944, subject: "Report of Comparison of Silt Samples," MRDH, and subsequent indorsements which appear in Appendix L, pages L-2 to L-13, inclusive. The data are summarized in Table 11.

Several comparative tests were made with the instantaneous Omaha sampler also during the regular sampling program, the results of which had not been analyzed for submission with the report of 13 March 1944. A subsequent analysis of the data indicates the comparisons shown in Table 12.

These data indicate that samples taken with the Omaha regular and instantaneous Omaha samplers contain more sediment than those taken with the D-43 sampler despite the fact that initial inrush would tend to make the Omaha samplers lose some sediment. The degree of error due to this source would decrease with decreasing particle sizes and it is possible that sediments in these samples were so fine as to reduce the error to insignificant proportions. In all three series of comparisons, the regular Omaha sampler caught greater sediment concentrations than did the D-43 sampler, notwithstanding the fact that initial inrush, the contamination of the sample by inflow while being lowered to the sampling point, and the normal-to-stream intake would tend to produce the opposite effect.

The comparative tests on the Omaha and D-43 samplers were continued during the summer of 1944 under a wide variety of stream conditions. The so-called Omaha modified sampler was used also in these tests. The results were submitted in a report to the District Engineer, St. Paul, Minnesota, dated 29 September 1944, which appears in Appendix L, pages L-14 to L-48, inclusive, together with a partial report on comparative tests with the point-integrating P-43, and the regular Omaha samplers.

TABLE 11

SUMMARY OF FIELD TESTS ON SEDIMENT SAMPLERS DURING 1943
BY THE U. S. ENGINEER OFFICE, OMAHA, NEBRASKA

Date	Sampler	Number of Tests	Mean Sediment Concentration grams/liter	Sampling Ratio Omaha/D-43
**	Omaha		8.11	
	D-43, 1/8-in. nozzle		7.56	1.07
**	Omaha		6.85	
	D-43, 3/16-in. nozzle		6.73	1.02
9/10/43	Omaha	10	2.647	
	D-43, 1/8-in. nozzle	10	2.272	1.165*
9/11/43	Omaha	10	2.245	
	D-43, 1/8-in. nozzle	10	2.058	1.090*
9/20/43	Omaha	10	2.653	
	D-43, 3/16-in. nozzle	10	2.743	0.968*
9/21/43	Omaha	10	2.699	
	D-43, 3/16-in. nozzle	8	2.428	1.112*
10/4/43	Omaha	10	2.285	
	D-43, 3/16-in. nozzle	10	1.798	1.270*
10/6/43	Omaha	10	1.404	
	D-43, 3/16-in. nozzle	8	1.022	1.372*
			Mean =	1.163*

**Samples taken concurrently with regular sampling program.

TABLE 12

RESULTS OF FIELD TESTS ON OMAHA INSTANTANEOUS SAMPLER

Sampler	Number of Tests	Sampling Ratio
Omaha/Omaha (Inst.)	43	1.06
Omaha/D-43	53	1.06
Omaha (Inst.)/D-43	76	1.10

A few tests were made with the D-43 and the Omaha regular and modified samplers in identical operation procedures. In some parallel tests the Omaha samplers were used as depth-integrators in the manner prescribed for the D-43, while in other tests the D-43 sampler was used as a point sampler in the manner adopted for operating the Omaha samplers. However, in the majority of tests the samplers were operated by the respective methods adopted for their use and therefore the results are not strictly indicative of the relative sampling characteristics of the samplers. Concealed in these results is also the intangible effect of the difference in the method of sampling which cannot be segregated from that of the differences in sampling action inherent in the samplers themselves.

The sampling ratios indicated by comparable tests in the 1944 series are given in Table 13.

TABLE 13

SUMMARY OF FIELD TESTS ON SEDIMENT SAMPLERS DURING 1944
BY THE U. S. ENGINEER OFFICE, OMAHA, NEBRASKA

Samplers	No. of Comparisons	Sampling Ratio	Remarks
Omaha/Omaha Mod.	14	0.93	Methods comparable but not sampling action
Omaha*/Omaha Mod.	10	1.08	do.
Omaha Mod./D-43	24	1.22	Neither method nor sampling action comparable
Omaha/D-43	14	1.14	do.
Omaha*/D-43	10	1.32	do.

*Float inverted in Omaha sampler.

These tests confirm the results of the 1943 series in indicating that samples taken with the regular Omaha sampler contain greater concentrations of sediment than do comparable samples taken with the D-43 sampler. The data are not sufficiently complete to determine what proportions of the discrepancies might be due to the differences in sampling methods and how much is due to the differences in the action of the samplers themselves.

The Omaha report of 13 March 1944 states that samples are taken with the Omaha sampler at points in the vertical located so that the composite sample will indicate the average sediment concentration. Inasmuch as equal volumes of sample are taken at all the sampling points, the respective samples should be taken at centroids of equal discharge. Presumably this is the method used in the Omaha District. If it is not, a considerable error may be introduced in combining the point samples and assuming that the composite represents the mean sediment concentration in the vertical. The

error would increase as the sediment concentration and velocity in the vertical deviate from uniform distributions and as the sampling points depart from the centroids of equal water discharge.

The results obtained in the comparison of the point- and depth-integrating methods of sampling with the Omaha and D-43 samplers are shown in Table 14.

TABLE 14

COMPARISON OF SAMPLING METHODS WITH OMAHA AND D-43 SAMPLERS

Samplers Tested	Sampling Method	Number of Comparisons	Sampling Ratio
Omaha Reg.	Point/Integrating	3	0.95
Omaha Mod.	Point/Integrating	1	1.17
D-43	Point/Integrating	4	0.98
		Mean	0.99
Omaha Reg./D-43	Point	6	1.18
Omaha Reg./D-43	Integrating	4	1.11
		Mean	1.15

These tests indicate that a greater discrepancy in sediment concentrations obtains in the comparison of samplers than in the comparison of methods. Approximately the same excess of sediment is indicated in the Omaha samples over the D-43 samples when both instruments are operated by the same methods as when the Omaha was used as a point-integrator and the D-43 as a depth-integrator. Both the Omaha and D-43 samplers caught slightly less sediment when used as point-integrators than when used as depth-integrators, which is to be anticipated because of the initial inrush which would occur in the method used for point-integration in these tests and because in the point method it is probable that an insufficient proportion of the heavier load near the stream bed was obtained. However, these results should not be considered conclusive on account of the small number of tests performed and because the comparisons showed considerable disparity among themselves.

The partial report on comparative tests with the point-integrating sampler, P-43, and the Omaha regular sampler indicates the results shown in Table 15. The mean sampling ratio obtained in these tests is substantially in agreement with that of the regular Omaha with respect to the D-43 sampler shown in a previous tabulation. It is significant, however, that the sampling ratio in the P-43 tests approaches unity as the sampling depth increases. It appears that the apparent characteristics of the Omaha sampler to catch a greater concentration than the integrating samplers is partially offset by its tendency to lose sediment due to initial inrush, which tendency increases as the sampling depth becomes greater.

As stated in the Omaha report, the sampling ratio, Omaha/D-43, tends to increase as the sediment concentration in the sampler decreases. The data have been examined and analyzed to find some plausible explanation for this fact. The actual sediment concentrations found in corresponding samples taken with any two samplers were plotted with respect to each other on rec-

TABLE 15

COMPARISON OF OMAHA AND US P-43 SAMPLERS

River	Depth ft.	Number of Samples	Sampling Ratio Omaha/P-43	Mean
Little Sioux	1.6	7	1.18	
	4.7	7	1.15	
	6.2	7	1.08	
				1.14
Missouri	1.3	8	1.145	
	3.8	8	1.14	
	6.4	8	1.12	
	9.2	8	1.11	
	12.7	8	1.07	
				1.12

tangular coordinate graphs. These plots showed linear relationships between sediment concentrations with coefficients varying from 0.93 to 1.17. However, in the majority of comparisons, a residual discrepancy varying from 0.15 to 0.90 grams per liter was indicated. The correlation equations determined in the various comparisons that were investigated are shown in Table 16.

Disregarding the tests in which the float in the Omaha sampler was inverted, the coefficient in the correlation equations for the regular Omaha and D-43 samplers in the 1943 tests was 1.04 and in the 1944 tests, 1.00, as shown on lines 1 and 4, respectively, in Table 16, whereas the mean sampling ratios for these series of tests were 1.11 and 1.14, respectively.

The data fail to yield any conclusive explanation for the constant discrepancy which is indicated in several of these comparisons. The laboratory procedure used in analyzing parallel samples presumably was consistent, but the possibility that it was not should not be overlooked. The effect of the 3-fold and 5-fold volumes of sample taken with the Omaha sampler relative to those taken with the D-43 sampler should also be investigated.

An examination of the sediment analysis graphs for the 1944 tests which accompanied the report of 29 September indicate that the Omaha sampler in general takes a larger proportion of coarse sediment than does the D-43 sampler. This characteristic was given considerable study in an attempt to

TABLE 16

CORRELATION EQUATIONS FOR SAMPLING DATA
OBTAINED WITH OMAHA, D-43, AND P-43 SAMPLERS

Samplers	Test Series	Mean Sampling Ratio	Equation of Correlation units grams per liter
Omaha/D-43	May-Sept. 1943	1.16) 1.06)	Om. = 1.04 D-43 + 0.20
Omaha(Inst.)/D-43	May-Sept. 1943	1.10	Om.(Inst.)=1.10 D-43+0.00
Omaha/Omaha(Inst.)	May-Sept. 1943	1.06	Om. = 1.06 Om.(Inst.)+0.00
Omaha/D-43	July-August 1944	1.14	Om. = 1.00 D-43 + 0.90
Omaha*/D-43	July-August 1944	1.32	Om. = 1.17 D-43 + 0.70
Omaha(Mod.)/D-43	July-August 1944	1.22	Om.(Mod.)=1.09 D-43 + 0.70
Omaha/Omaha(Mod.)	July-August 1944	0.93	Om. = 0.93 Om.(Mod.)+0.00
Omaha*/Omaha(Mod.)	July-August 1944	1.09	Om. = 1.09 Om.(Mod.)+0.00
Omaha/P-43	September 1944	1.13	Om. = 1.02 P-43 + 0.15

*Float in Omaha sampler inverted.

find an explanation for the higher concentration obtained in the Omaha samples than in the D-43 samples. From the size analysis graphs was read the percentage of sediment in each sampler finer than 0.02 mm., a size arbitrarily chosen. By means of this factor the concentration of sediment in the sample finer than 0.02 mm. was determined. The ratios of these concentrations for the Omaha samples in respect to the corresponding D-43 samples were then determined for each test. The results are summarized in Table 17.

These comparisons indicate a considerably better agreement in sediment concentrations taken by the various samplers in the fractions with particles finer than 0.02 mm. than in the entire samples. Apparently the Omaha regular and modified samplers both catch an excess amount of large particles, whereas the nature of the sampling action would indicate the opposite effect. In a series of tests made with the Omaha regular and modified samplers with the float normal, inverted, and removed, it was found that considerable error in sampling results if the float is not in the normal position. Even with the float in the normal position some error resulted if the sampler was left submerged, or was hoisted up and down a number of times, after the container had been filled. From these tests, it might be suspected that the floats

used in the Omaha samplers may have failed to seal the intake and air exhaust tubes and consequently allowed some circulation through the full containers to take place. Should this have been the case, it is obvious that the Omaha samplers should show greater percentages of sediment as well as a larger proportion of coarse particles.

TABLE 17

COMPARISON OF OMAHA AND D-43 SAMPLES
WITH PARTICLES LARGER THAN 0.02 MM. EXCLUDED

Samplers	Number of Comparisons	Sediments Finer Than 0.02 mm.	Total Sample
Omaha/D-43	14	1.06	1.14
Omaha*/D-43	11	1.13	1.32
Omaha(Mod.)/D-43	23	1.06	1.22
Omaha/Omaha(Mod.)	13	0.97	0.93
Omaha*/Omaha(Mod.)	10	1.04	1.08

*Float inverted in Omaha sampler.

The comments of the Omaha District regarding the operation of the D-43 sampler are generally favorable except that the head catches became worn and too loose to clamp the head tightly. In certain instances it was found that a sampler lighter than 50 pounds would have been more convenient to operate and entirely suitable for mild stream conditions while in other instances a heavier sampler would have been more satisfactory.

The Omaha report states that a larger sample container would be desirable when size gradations are to be determined and the sediment concentration is low. However, in general, a one-pint sample was found to be sufficient both for determination of concentrations and size gradation of particles. To facilitate handling and mounting the sampler on the hoisting cable, the standard current meter hanger bar for which the sampler was adapted has been replaced by a specially constructed strap hanger bar with a split figure-8 link for attaching the suspension cable and a 1/2-inch round steel grip.

14. Field tests by the U. S. Engineer Office, Buffalo, New York--During the period April to September 1944, the Cleveland Suboffice of the Buffalo District investigated sedimentation problems in the lake harbor at the mouth of the Cuyahoga River to determine the feasibility of providing de-silting basins to eliminate the necessity of annual dredging to maintain navigable

depths. A US D-43 sampler was used in taking suspended sediment samples at two stations in the Cuyahoga River. Short reports on the experiences of the Buffalo District in the use of the sampler were submitted 12 May and 14 September 1944 which appear in Appendix M.

Inasmuch as no other suspended sediment sampler was used in these tests, the sediment data obtained would have no value in determining the relative sampling characteristics of the D-43 sampler, and consequently no test data were submitted with the reports. However, the reports state that the D-43 sampler was found very satisfactory under all conditions encountered. No difficulties were experienced in its operation even in velocities as high as 5.6 ft. per sec. Inasmuch as the sediment load was very light, several samples had to be taken and combined in order to provide sufficient sediment for a reasonably accurate analysis. Composite samples of about 1 gallon were taken at each observation. Altogether, 30 samples were taken during the season.

III. SUMMARY

15. Summary of test results--Pursuant to the wishes and instructions of the Interdepartmental Committee on sediment sampling methods and equipment, ten depth-integrating samplers, designated US D-43 sediment sampler, were distributed in May 1943 to field offices of the cooperating agencies to be tested under practical field conditions to determine their utility and to obtain sufficient test data to correlate their sampling characteristics and accuracy with those of other types of samplers in current use. The point-integrating sampler, US P-43 sediment sampler, was made available for 60-day periods to field offices of the agencies desiring to make similar tests with it. The US P-43 and D-43 samplers are illustrated in the frontispiece and details of the samplers are shown in Figs. 6 and 7. Reports have been submitted by thirteen field offices discussing tests performed on either or both of these samplers and comparable tests on other extant samplers. The field reports, and test data included, have been analyzed in this report. The relative sampling characteristics of samplers compared, as indicated by the test data, and the principal criticisms of the US samplers brought out in the field reports are summarized in the following paragraphs.

The field test data obtained with the various sediment samplers reveal considerable disparity in the sediment concentrations found in samples collected with different samplers at the same sampling section or point. This disparity can be attributed in part to the fact that the samplers being compared were operated by different sampling methods, and, consequently, the results do not reflect the effect of the sampling action inherent in the individual samplers. The relative sampling characteristics of any pair of samplers can be determined from comparative tests only if the samples are collected by identical sampling methods. In many instances, supplementary information and data on the stream depths, velocities, and sampling intervals which would have aided materially in comparing the samplers were not available. However, on the basis of the data and information submitted with the reports, sampling ratios have been determined for the various samplers tested with respect to the D-43 and P-43 samplers. In some instances, these sampling ratios indicate the composite effect of different sampling actions and different sampling methods as has been pointed out in the discussions of the respective field reports. The various sampling ratios obtained in the comparative tests are summarized in Table 18.

In many of these comparisons, the discrepancies are not serious. However, the majority of tests were made under stream conditions conducive to minimizing the effects of faulty sampler action and improper sampling method, such as relatively shallow depths, moderate velocities, finely divided sediments, and uniform vertical distribution of both velocity and sediment concentration. Under these conditions, intake velocity, streamlining of sampler, and sampling procedure, based on theoretical principles as obtained in the design and methods prescribed for the D-43 and P-43 samplers, become relatively insignificant factors. But they assume more and more importance as the physical characteristics of the stream depart from these favorable sampling conditions. For instance, in the comparisons of the Texas sampler and

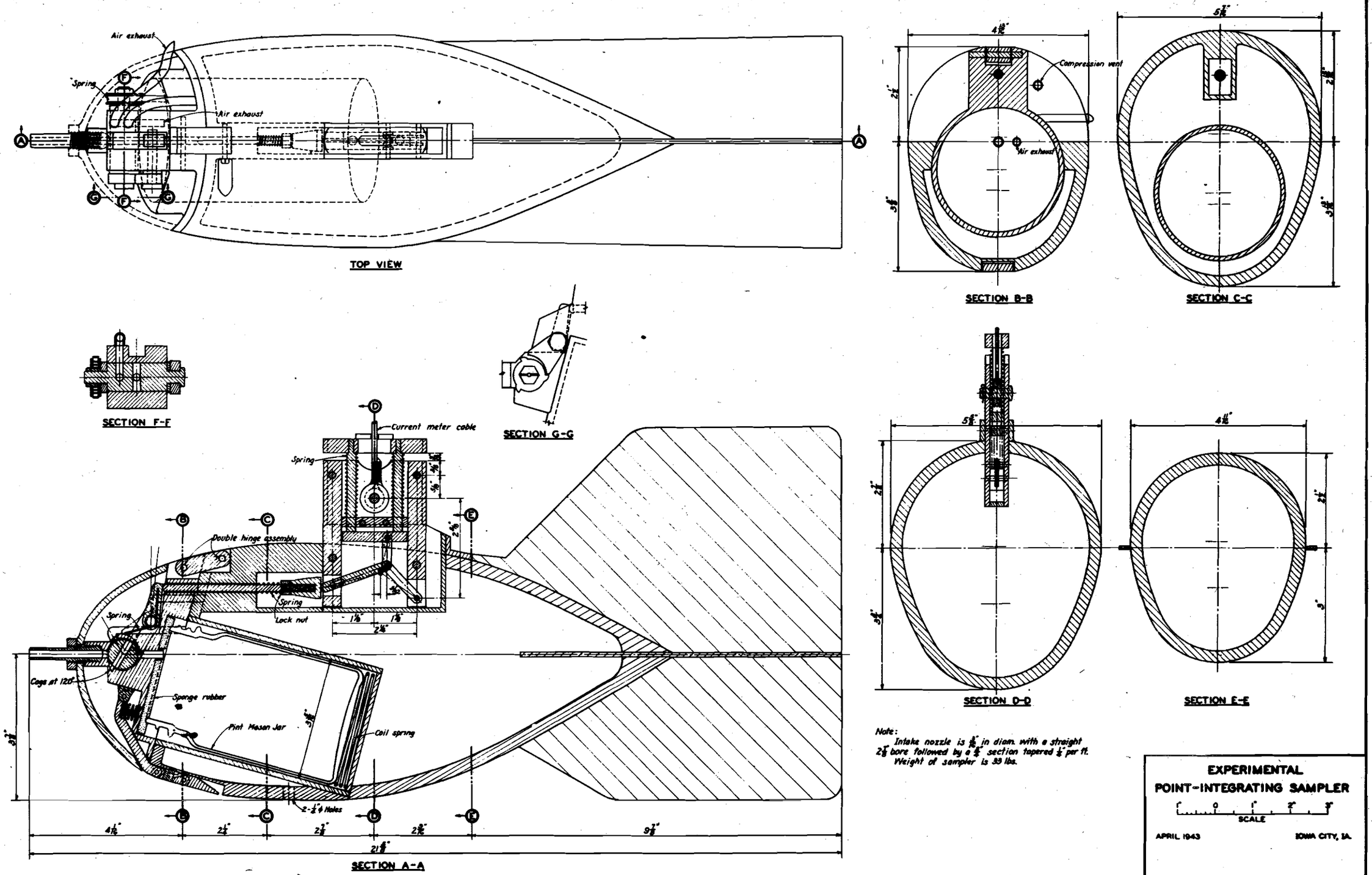
Air exhaust
Spring
Air exhaust
TOP VIEW
Compression vent
Air exhaust
SECTION B-B
SECTION C-C
SECTION F-F
SECTION G-G
Current meter cable
Spring
Double hinge assembly
Spring
Lock nut
Spring
Cage at 120°
Sponge rubber
Pint Mason Jar
Coil spring
2-1/4" ϕ Holes
SECTION A-A
SECTION D-D
SECTION E-E
Note:
Intake nozzle is 5/16" in diam. with a straight 2 1/8" bore followed by a 5/8" section tapered 1/4" per ft.
Weight of sampler is 39 lbs.
EXPERIMENTAL
POINT-INTEGRATING SAMPLER
SCALE
APRIL 1943
IOWA CITY, IA.

FIG. 6

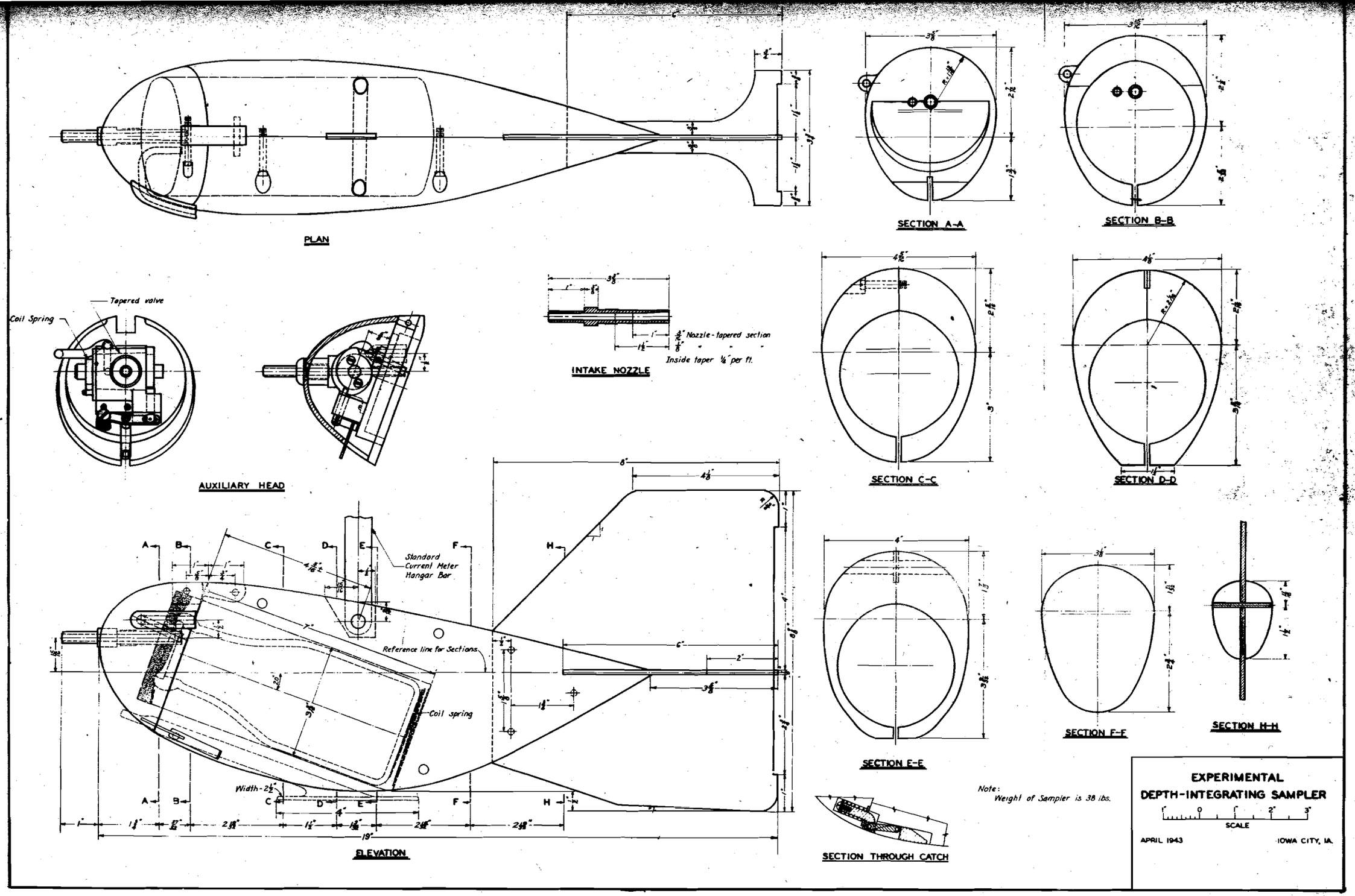
PLAN
SECTION A-A
SECTION B-B
Tapered valve
Coil Spring
AUXILIARY HEAD
INTAKE NOZZLE
Nozzle-tapered section
Inside taper 1/4" per ft.
SECTION C-C
SECTION D-D
Standard Current Meter Hangar Bar
Reference line for Sections
Coil spring
Width-2 1/2"
ELEVATION
SECTION E-E
SECTION F-F
SECTION H-H
SECTION THROUGH CATCH
Note:
Weight of Sampler is 38 lbs.
EXPERIMENTAL
DEPTH-INTEGRATING SAMPLER
SCALE
APRIL 1943
IOWA CITY, IA.

FIG.7

TABLE 18

SUMMARY OF SAMPLING RATIOS INDICATED
BY FIELD TESTS ON SEDIMENT SAMPLERS

Agency	Samplers Compared	No. of Comparisons	Sampling Ratio		
			Min.	Max.	Avg.
U.S.B.R.	*Tait-Binckley/D-43	4	0.81	0.92	0.87
	*Tait-Binckley/D-43	5	0.66	1.00	0.77
U.S.E.O.					
Tulsa	*Texas/D-43	78	--	--	1.04
	*Vicksburg/D-43	23	--	--	1.09
	*Vicksburg/D-43	7	--	--	1.12
	*P-43/D-43	23	--	--	1.08
	*P-43/D-43	7	--	--	1.08
Albuquerque	Wading sampler/D-43	6	0.77	1.05	0.98
	*Faris/D-43	7	0.76	1.02	0.91
	Colorado/D-43	1	--	--	1.03
	*Faris/D-43	7	0.31	0.82	0.48
Sacramento	Sacramento/D-43	6	0.50	2.50	1.10
Rock Island	RI/D-43	8	0.68	1.45	1.13
Omaha	Omaha/D-43	6	0.97	1.37	1.16
	*Omaha/D-43	53	--	--	1.06
	*Omaha(Inst.)/D-43	76	--	--	1.10
	*Omaha Mod./D-43	24	1.06	1.55	1.22
	*Omaha/D-43	14	1.03	1.31	1.14
	*Omaha**/D-43	10	1.17	1.66	1.32
U.S.B.R.	Tait-Binckley/P-43	24	0.67	2.14	1.26
U.S.E.O.					
Huntington	ORD/P-43	5	0.89	1.01	0.94
Tulsa	Texas/P-43	23	--	--	0.97
	Vicksburg/P-43	45	--	--	1.03
	Vicksburg/P-43	7	--	--	1.04
Omaha	Omaha/P-43	8	--	--	1.13

*Sampling ratio is affected by both sampling method and sampling action.

**Float inverted in Omaha sampler.

US D-43 in the Tulsa Engineer District where stream velocities and sediment concentrations were relatively low, the mean sampling ratio was 1.04, whereas in one of series of tests made in the Albuquerque Engineer District with the same samplers and identical sampling methods, but with higher stream velocities, coarser sediment, and greater concentrations, the sampling ratio was 0.48. In view of the fact that, in general, the greater proportion of the suspended sediment load in any stream is transported during periods when stream conditions are adverse to accurate sampling, it would seem advisable to discard all methods and equipment of doubtful accuracy in favor of those which under all conditions would facilitate the measurement of suspended sediment loads and enhance the accuracy of the data obtained.

The field tests indicate that the US D-43 sampler is a practical instrument for the collection of depth-integrated samples in streams of average depth and velocities. As evidence that this sampler is being accepted favorably by the agencies and field offices it is known that sixteen duplicates of the present model have been constructed and that one other field office proposes to construct several in the near future. Furthermore, several field offices have modified existing samplers so as to approximate the sampling characteristics of the D-43. In some instances, the depths and velocities encountered were beyond the sampling range of the US D-43 sampler with the standard head. Under these conditions, the sampler should be equipped with the auxiliary head and bottom closing device which permits sampling to twice the depth by sampling on the downward trip only.

The need for a sampler weighing about 100 lbs. equipped with the auxiliary head and bottom closing device was indicated by several of the field offices. The Albuquerque Engineer District suggested that the sampler be redesigned so that it can be used also as a stream gaging weight, thus permitting samples to be collected without removing the current meter. Such a sampler would facilitate the determination of stream velocities and collection of samples in streams subject to rapidly changing stages. The need for a hand sampler for use in small or shallow streams was emphasized by the Tulsa and Albuquerque Engineer Districts.

Tests were made on the point-integrating sampler US P-43 by five field agencies. The design of this instrument was more intricate than that of the D-43 and its development was prematurely suspended. Consequently, numerous improvements in design were suggested, and obviously many of them are needed. The more important improvements which were suggested include conversion of the valve mechanism from drop-weight operation to electrical operation, adoption of a one-pint milk bottle container, increased weight with improved body streamlining, and modification of the intake nozzle to prevent deposition of sediment therein while the valve is closed.

The field tests indicated that, within the scope of the present model, the mechanical performance of the US P-43 sampler is satisfactory and the intake velocity very closely approximates the stream velocity, signifying correct sampling action. Several field agencies observed a definite need for this type of sampler, and suggested its development with the proposed improvements. The P-43 sampler can be used either as a point-integrator or

as a depth-integrator. However, in view of the wide variety of conditions encountered in practical sediment sampling, it is apparent that the D-43 and P-43 samplers have their respective fields of application and the end can be achieved most satisfactorily if the more suitable of the two is available when and where it is needed. One Engineer District Office considers the P-43 sampler more suitable than the D-43 for the sampling conditions in that area and proposes to construct a duplicate of the present model.

In some instances, it was indicated that the station equipment used in making stream discharge measurements is not entirely satisfactory for use in collecting daily sediment samples. It is believed, however, that the equipment available at most of the present stream gaging stations can be readily adapted to suit both needs.

The collection of sediment samples in some streams during flood periods was found to be difficult and at times it was impossible to obtain satisfactory samples. In this connection, it should be remembered that problems relating to the collection of samples during periods of flood flow are, in general, closely related to those encountered in the measurement of discharge. Usually, when it is difficult to make accurate discharge measurements, it will be found difficult also to collect accurate sediment samples. The accuracy obtained in the determination of sediment loads is, of course, dependent upon the accuracy of the sediment samples collected and the measurement of the related water discharge. Therefore, any attempt to obtain greater accuracy in sediment sampling than is possible in discharge measurements under corresponding conditions is not justified.

16. Recommendations--The reports submitted by field offices of the cooperating agencies on tests made with the US D-43 and P-43 samplers suggested a number of improvements in the design of the present samplers and recommended development of additional sampling equipment. These suggestions and recommendations are recapitulated for consideration by the Committee as follows:

a. The D-43 sampler constructed for field test purposes, while adequate for streams of average depths and velocities, is not suitable for use in small, shallow streams or in large, deep rivers. Alternate samplers recommended for the more extreme sampling conditions are described briefly as follows:

(1) A wading sampler for hand operation in small, shallow streams.

(2) A heavier model of the D-43 sampler weighing between 75 and 125 pounds with an auxiliary head and more positive catches for use in streams with depths and velocities beyond the range of the present test models.

(3) A dual purpose sampler for use in streams subject to rapidly rising or falling stages where consecutive collection of

samples and determination of stream velocities are required. The rating for the current meter would be obtained in the usual manner.

b. The P-43 sampler used in the field tests was the second experimental model. As anticipated, a number of improvements in design were recommended, the more important of which are the following:

(1) Electrical operation of the valve tripping mechanism.

(2) Weight of sampler increased to at least 75 pounds with improved streamlining.

(3) Adaptation of the sampler to the use of one-pint milk bottle sample containers.

(4) One field report suggested that the P-43 intake be modified to prevent deposition of sediment in the nozzle while the sampler is submerged and the valve is closed. However, since the valve mechanism on this sampler is quite intricate, its general redesign to eliminate this objection should be contingent upon a quantitative determination of the degree of error due to this source.

A satisfactory sampler of the P-43 type, which can be used to collect either depth- or point-integrated samples in large or small streams, is needed especially for determining sediment loads in streams having depths and velocities which are beyond the range of the D-43 sampler, for studying the movement of sediment through reservoirs and lakes, and for determining the distribution of fluvial sediment concentration and grain size with respect to depth.

In addition to the specific recommendations enumerated above, the field reports indicate by inference, if not by direct statement, also the following propositions:

a. In view of the limited scope of the comparative field tests made to date on the D-43, P-43, and other samplers in current use, it appears desirable that the field tests be continued so as to cover the widest possible range of sampling conditions. Preferably, the tests should be conducted with close collaboration of the field and design personnel. Field offices using samplers and sampling methods which now appear of dubious accuracy should prosecute comparative tests until the points in question have been settled to their complete satisfaction and correlation coefficients have been determined if possible. Reports covering these tests and the analyses of the results should be compiled and distributed periodically to those interested in facilitating methods and improving the accuracy of sampling.

b. The understanding of sediment problems would be enhanced materially if the field personnel of the various agencies were provided opportunities to discuss mutually the various methods of determining sediment loads and the laboratory procedures used in analyzing samples.

Such conferences would be profitable expecially to laboratory personnel, in view of the fact that the bottom withdrawal tube method of size analysis recently developed under the cooperative project has been given laboratory tests in several field offices and found to be a decided improvement over other methods. This method was used by at least two field offices in the analysis of sediment samples, the results of which were submitted with reports found in the accompanying appendices. In this connection, it appears desirable that a joint report on experiences of the various laboratory personnel in the use of the bottom withdrawal tube would be a valuable contribution to personnel engaged in any phase of fluvial sediment sampling.

c. If the present interest in adopting the US D-43 and P-43 samplers as standard sampling equipment continues, and the construction of the new sampling equipment is assigned to various firms throughout the country, it would be desirable to have each new model tested in a hydraulic laboratory flume in order to maintain some degree of standardization and control over the more important design features. The poise of each sampler when submerged and the intake characteristics under laboratory conditions particularly should be checked.